hansgrohe

Service

96638000 (450 mm)
96786000 (490 mm)

G3/8
97456000 (450 mm)

G3/8
92898000 (900 mm)

G3/8
96666000 (350 mm)
96667000 (450 mm)
95141000 (450 mm)
97206000 (450 mm)
96507000 (450 mm)
95664000 (600 mm)
96556000 (600 mm)
97398000 (600 mm)
95372000 (900 mm)
96316000 (900 mm)
98785000 (900 mm)

G1/2
97443000 (450 mm)
95648000 (450 mm)
97489000 (900 mm)

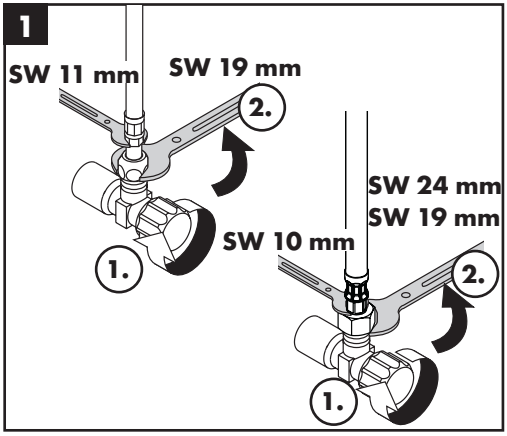
1
SW 11 mm
SW 19 mm
2.
1.
SW 24 mm
SW 19 mm
SW 10 mm
2.
1.

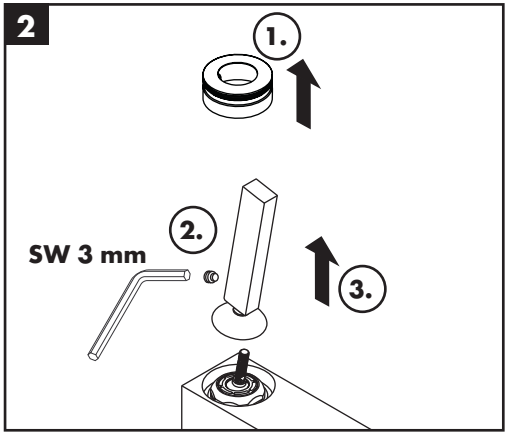
2
1.
2.
SW 3 mm
3.

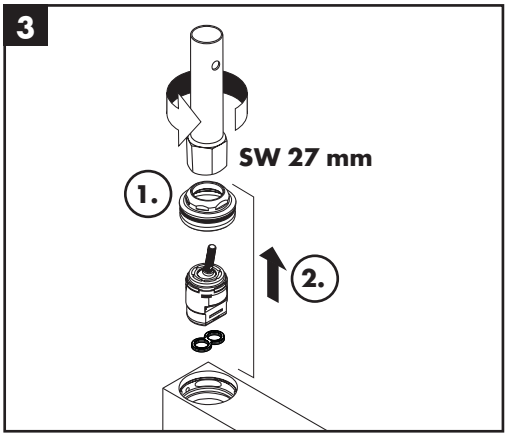
3
SW 27 mm
1.
2.

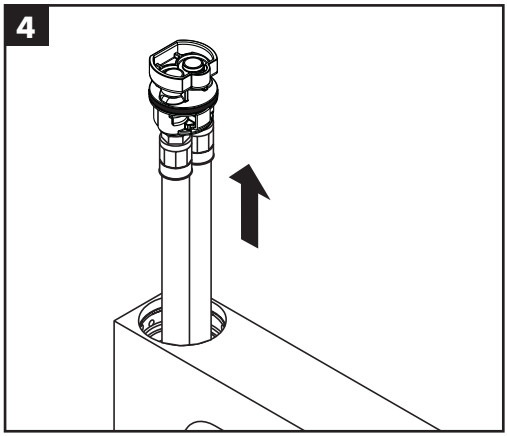
4

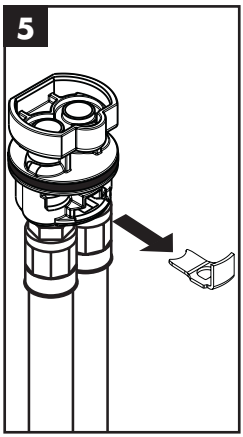
5

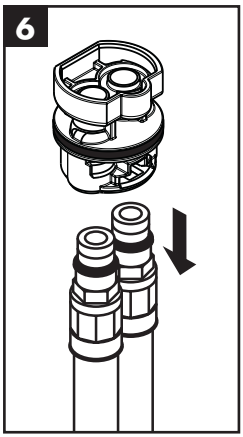
6

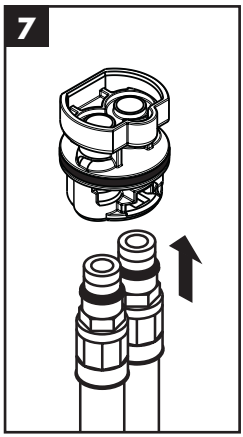
7

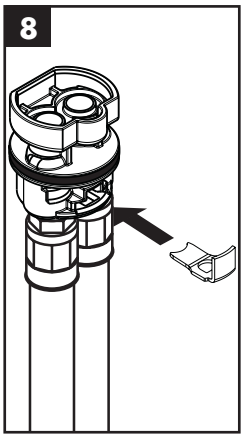
8

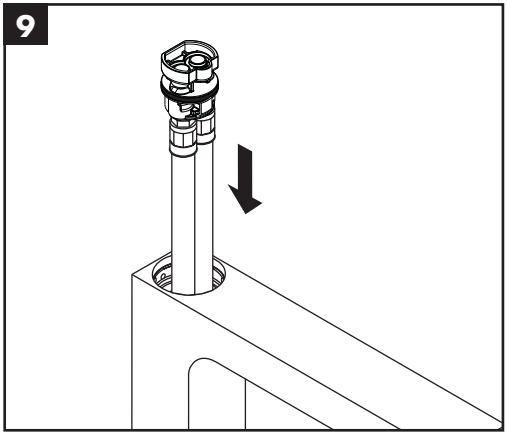
9

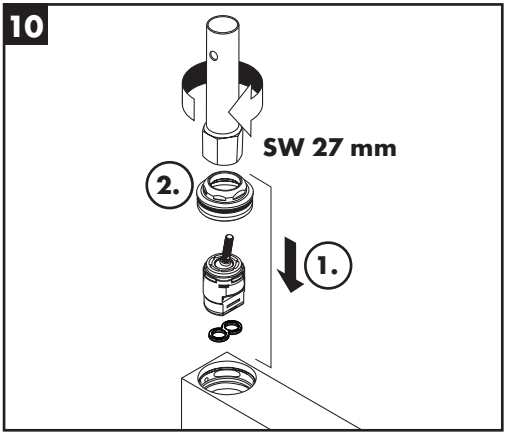
10
SW 27 mm
2.
1.

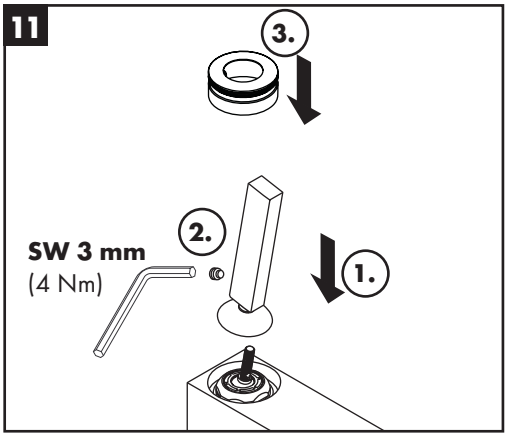
11
3.
2.
SW 3 mm
(4 Nm)
1.

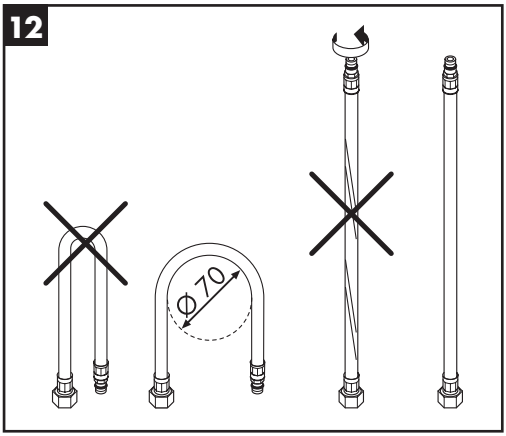
12
Ø 70

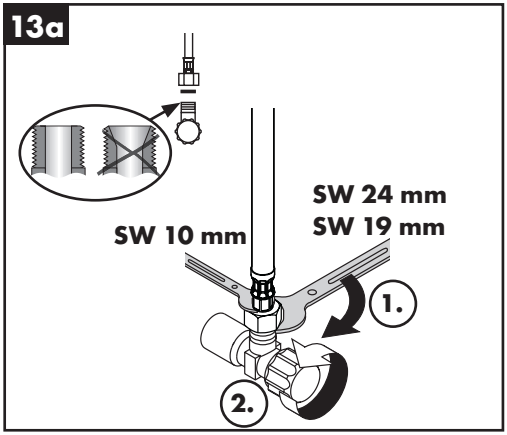
13a
SW 24 mm
SW 19 mm
SW 10 mm
1.
2.

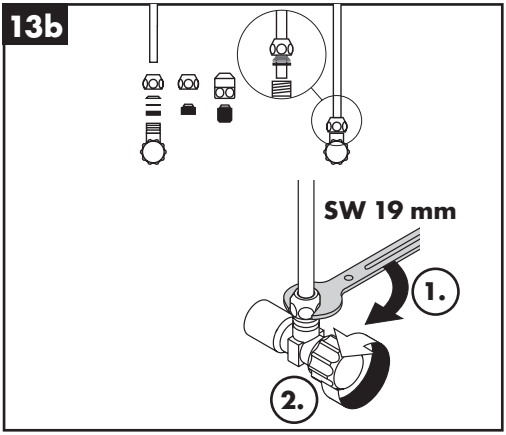
13b
SW 19 mm
1.
2.

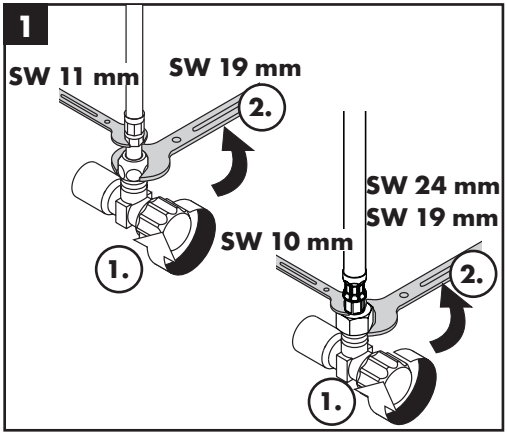
1
SW 11 mm
SW 19 mm
2.
1.
SW 10 mm
SW 24 mm
SW 19 mm
2.
1.

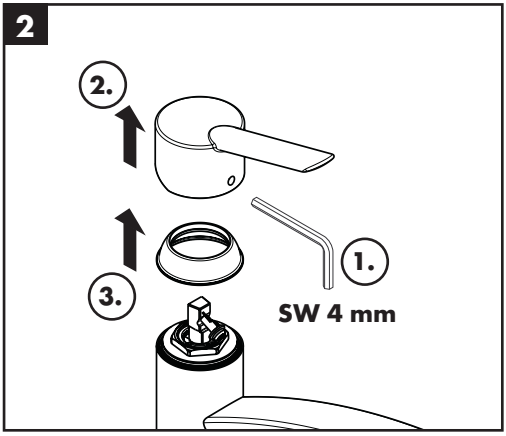
2
2.
3.
1.
SW 4 mm

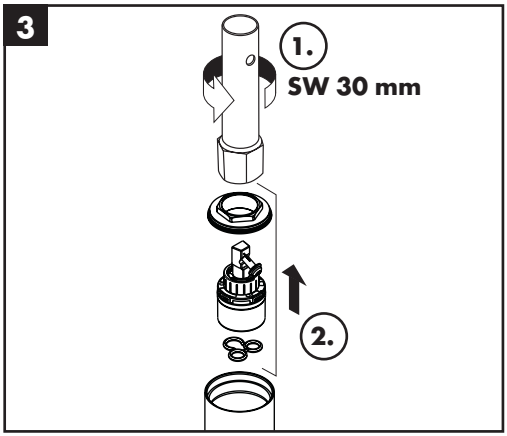
3
1.
SW 30 mm
2.

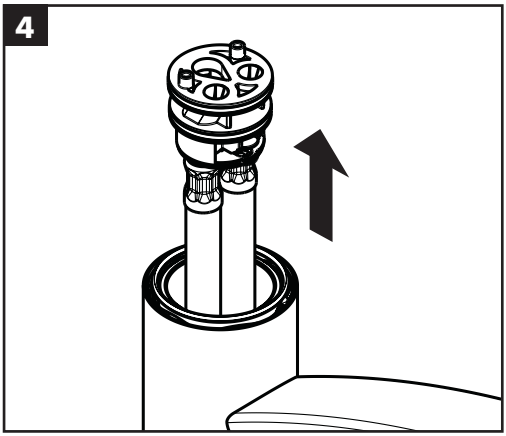
4

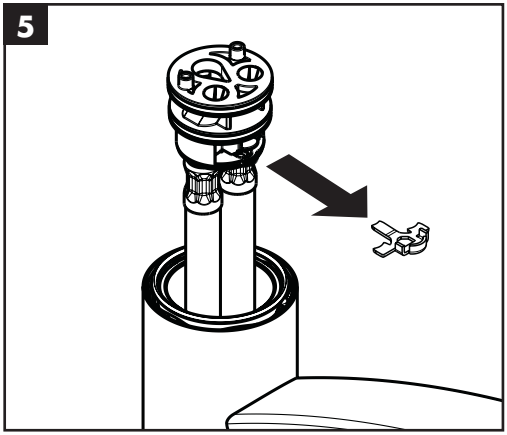
5

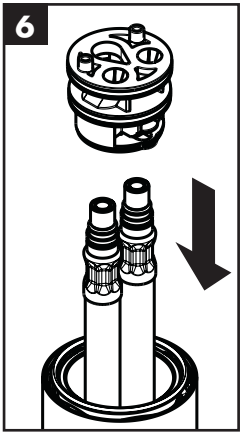
6

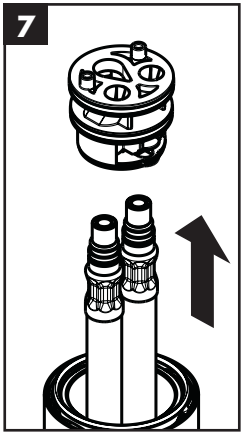
7

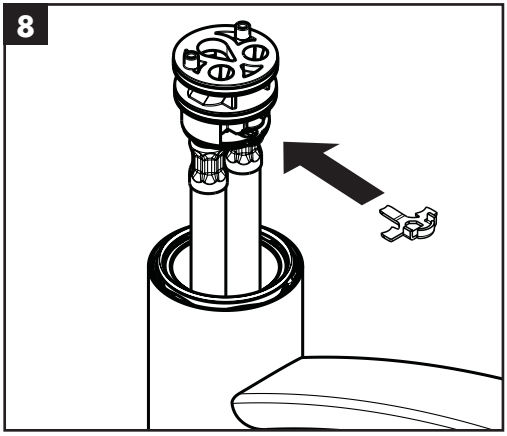
8

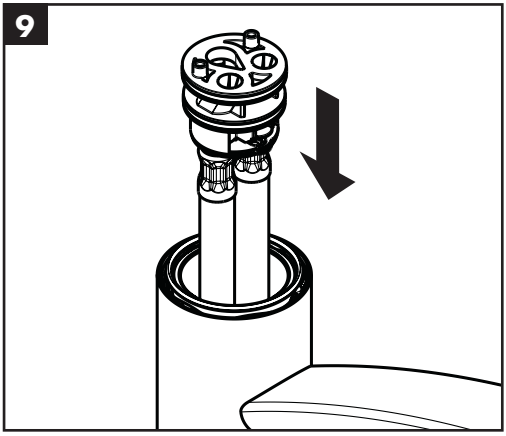
9

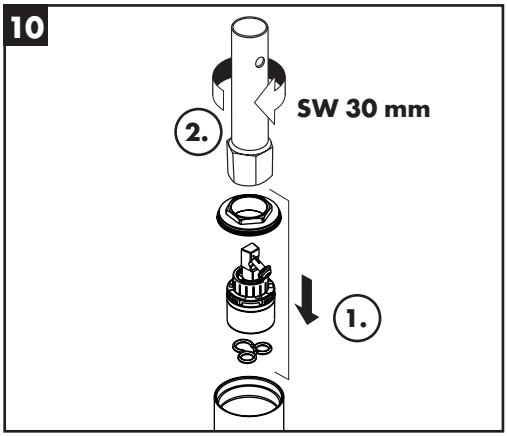
10
SW 30 mm
2.
1.

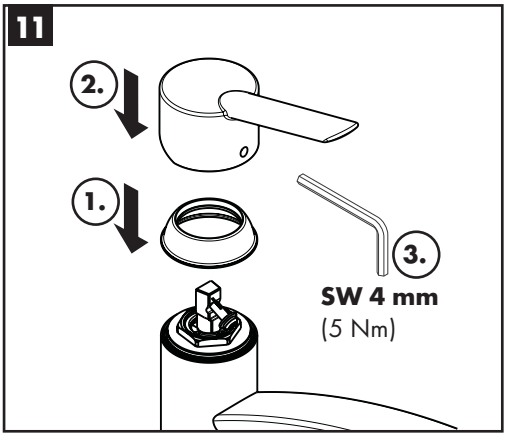
11
2.
1.
3.
SW 4 mm
(5 Nm)

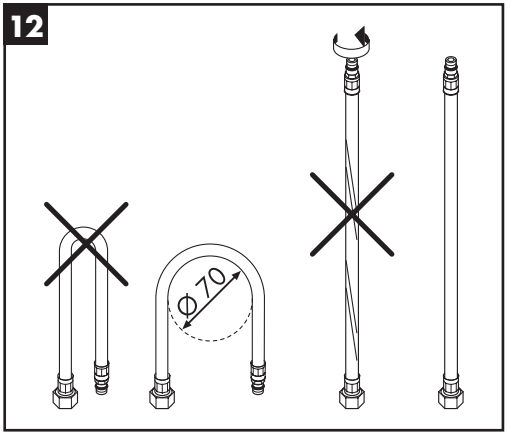
12
Ø 70

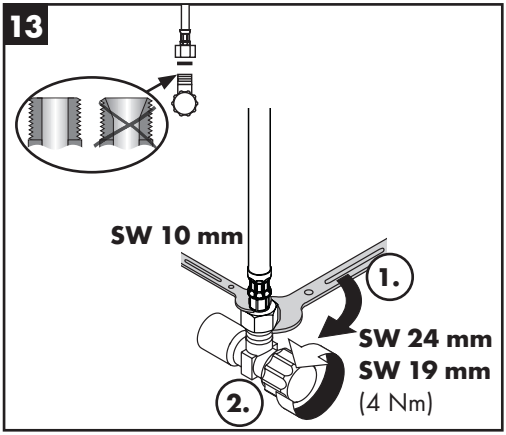
13
SW 10 mm
1.
SW 24 mm
SW 19 mm
(4 Nm)
2.

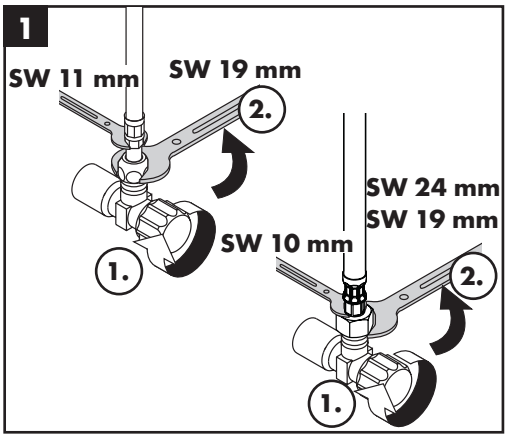
1
SW 11 mm
SW 19 mm
2.
1.
SW 24 mm
SW 19 mm
SW 10 mm
2.
1.

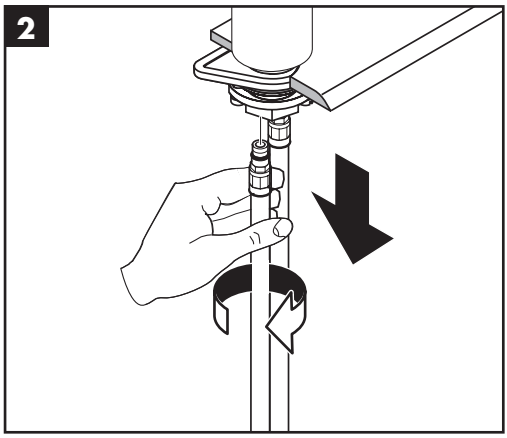
2

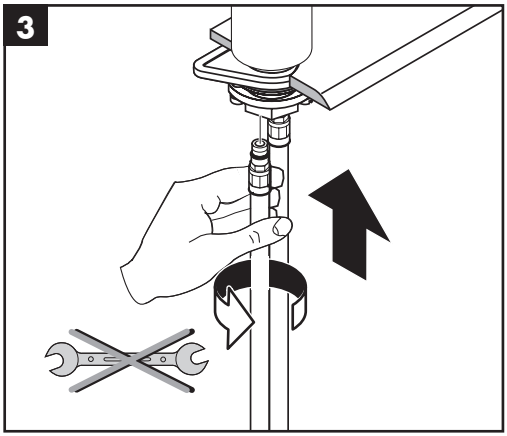
3

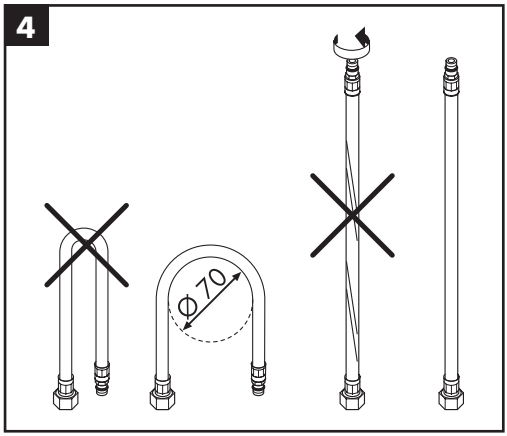
4
Ø 70

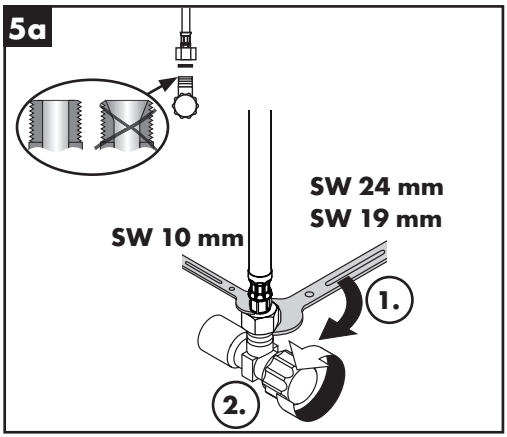
5a
SW 24 mm
SW 19 mm
SW 10 mm
1.
2.

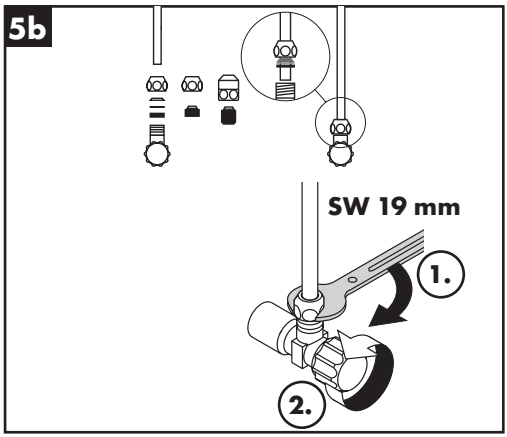
5b
SW 19 mm
1.
2.

1

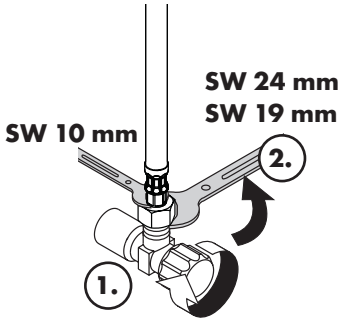

2

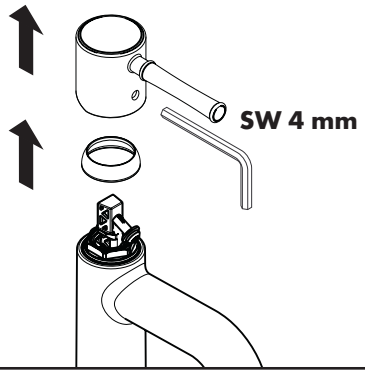

3

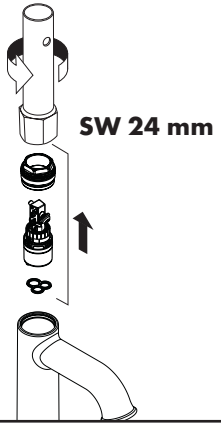

4

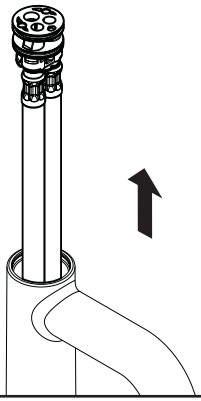

5

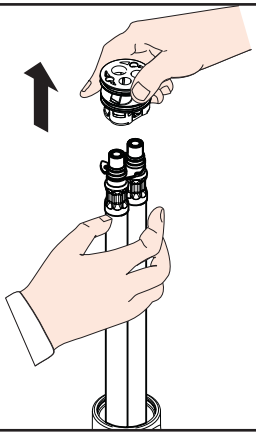

6

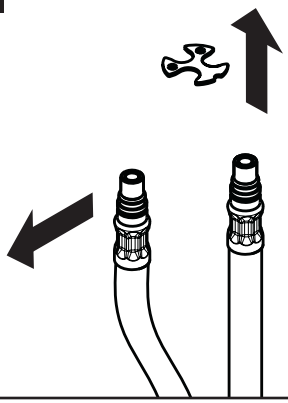

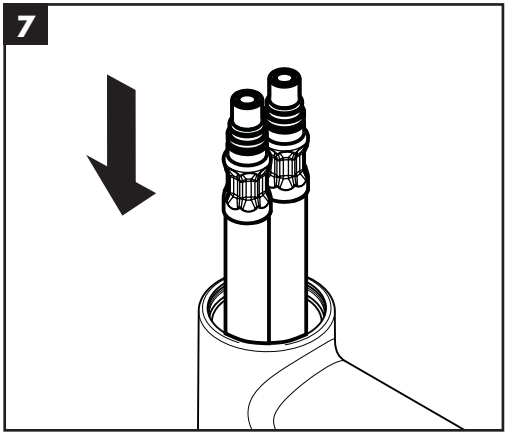
7

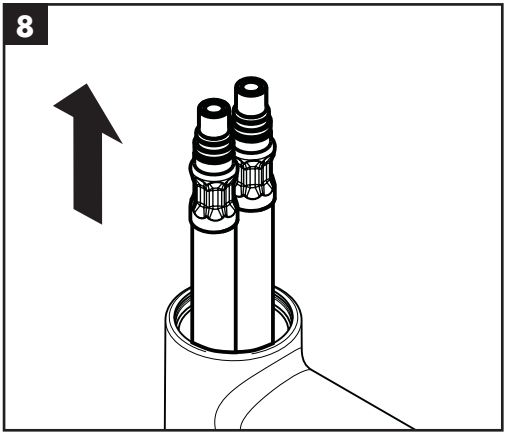
8

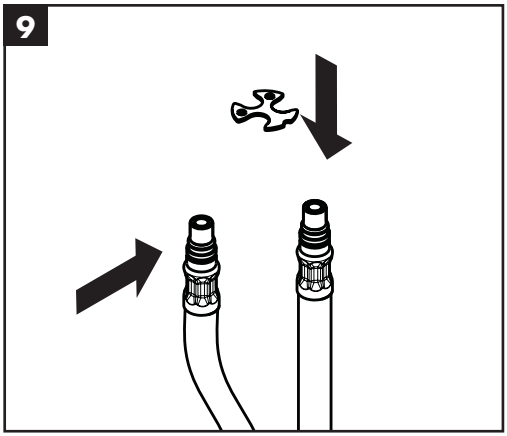
9

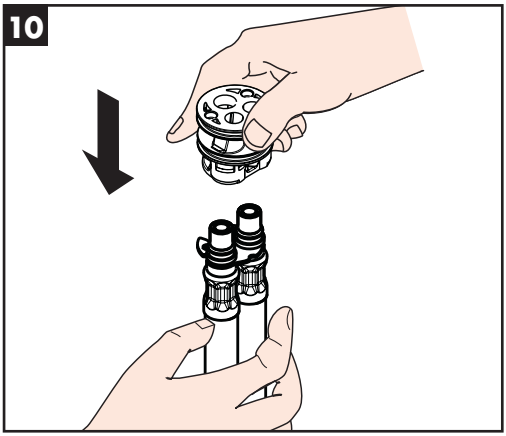
10

11

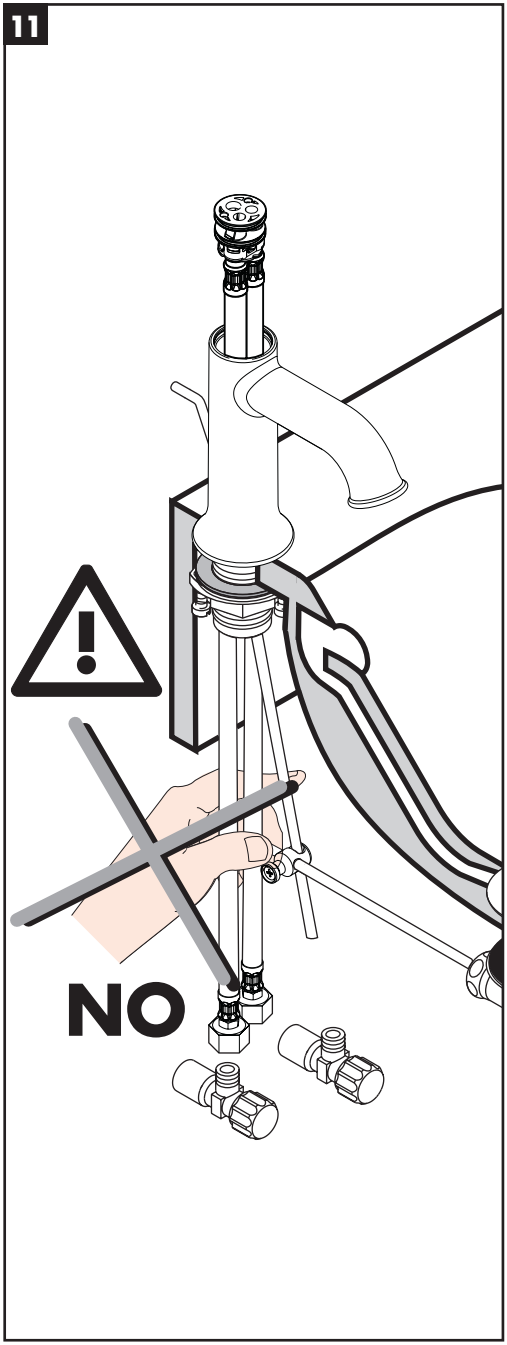

12

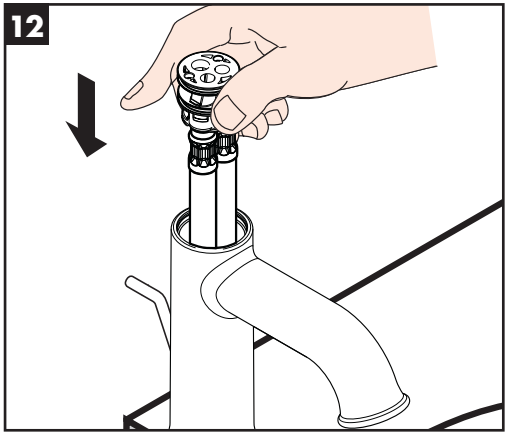

13

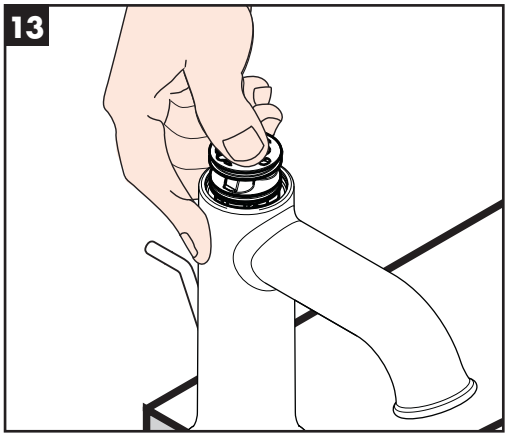

14

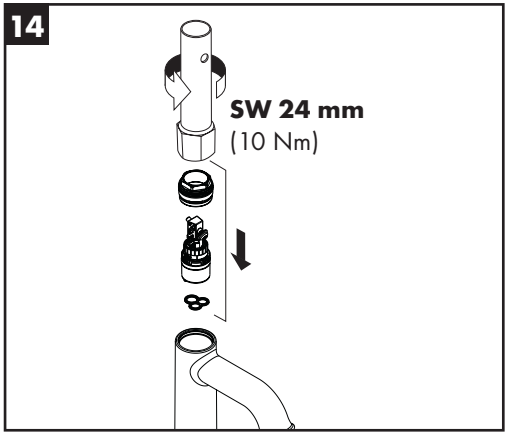

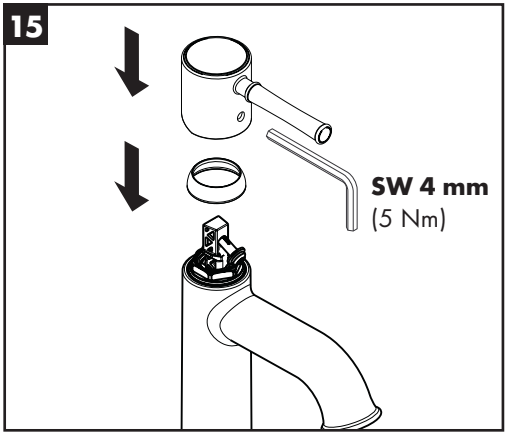
15
SW 4 mm
(5 Nm)

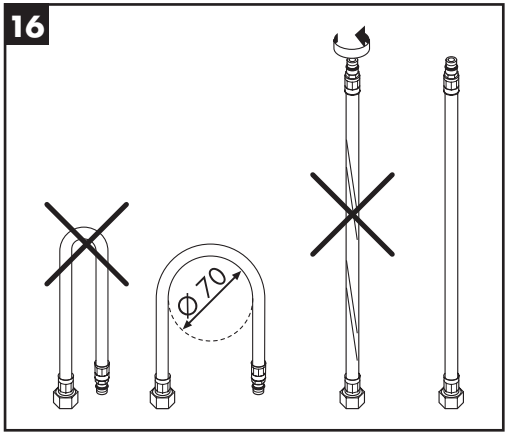
16
Ø 70

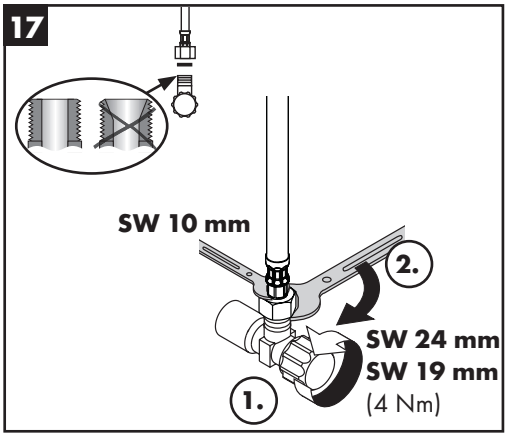
17
SW 10 mm
2.
SW 24 mm
SW 19 mm
(4 Nm)
1.

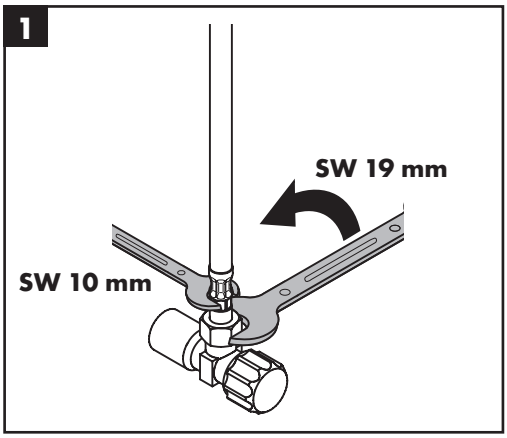
1
SW 19 mm
SW 10 mm

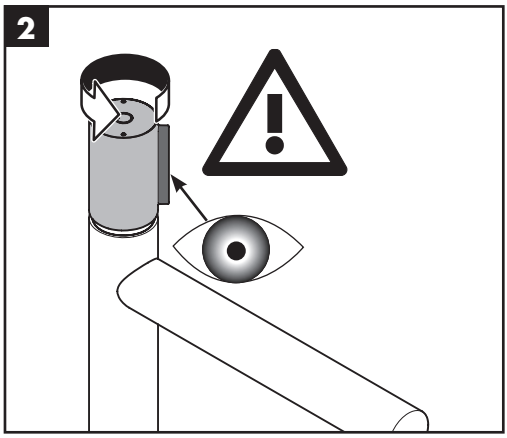
2

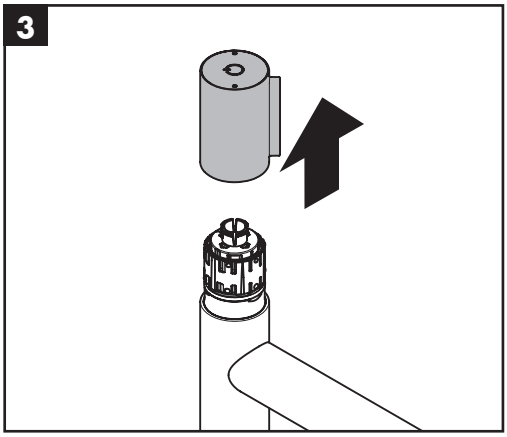
3

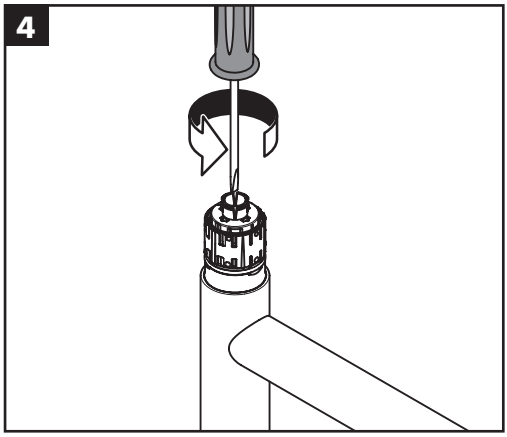
4

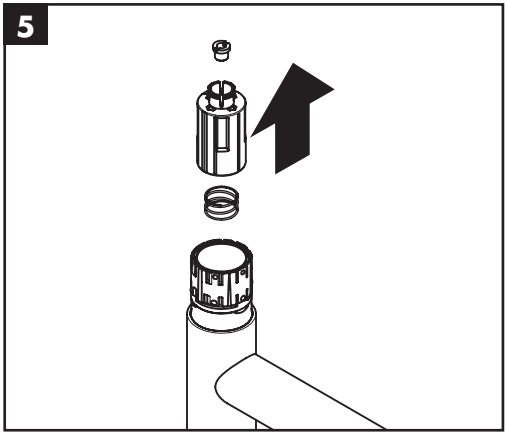
5

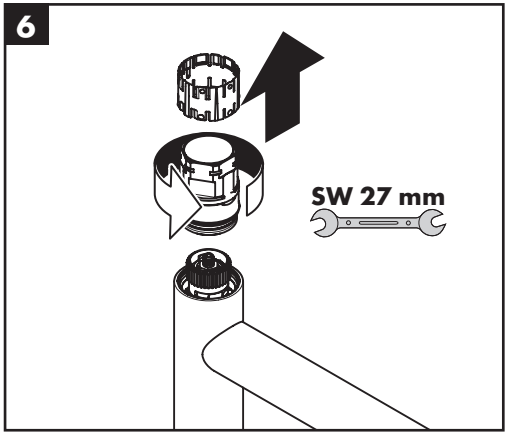
6
SW 27 mm

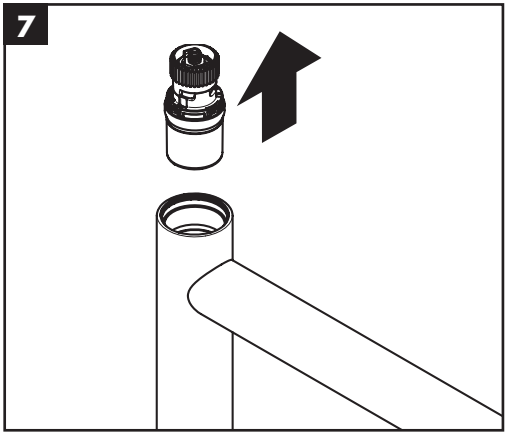
7

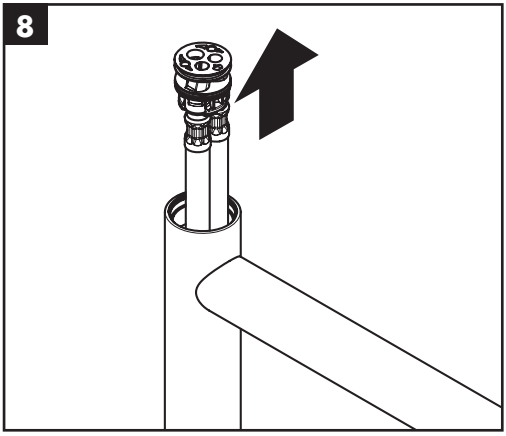
8

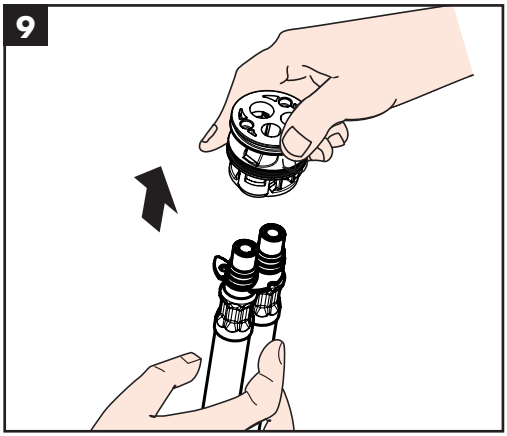
9

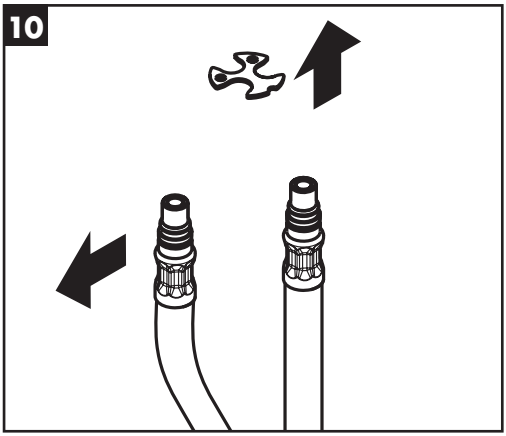
10

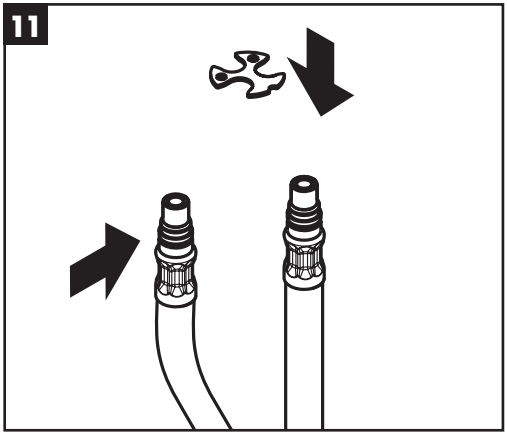
11

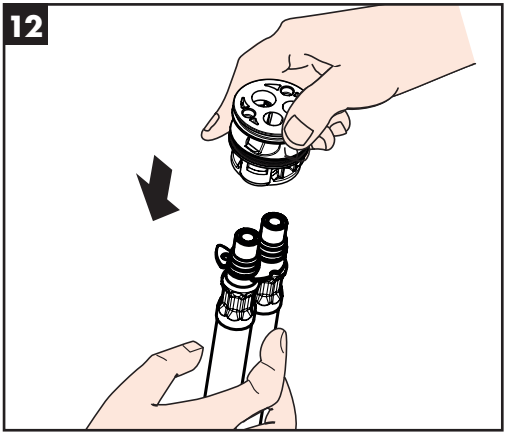
12

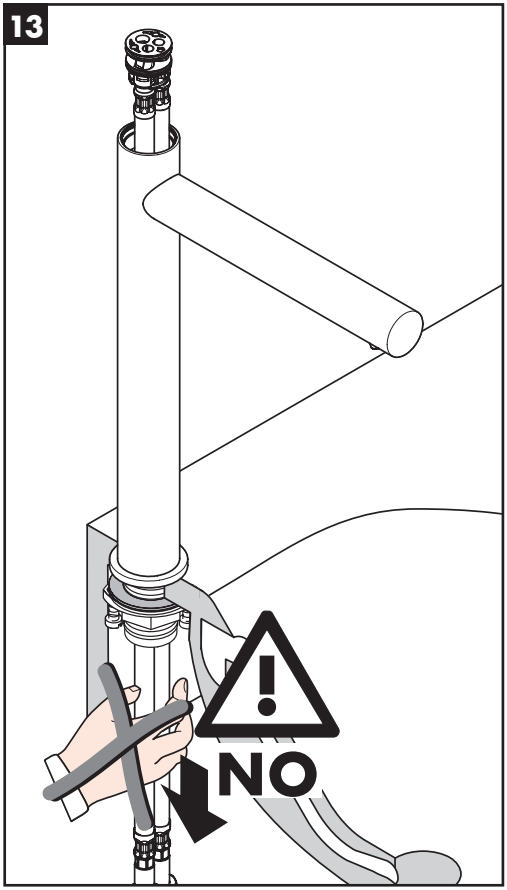
13
NO

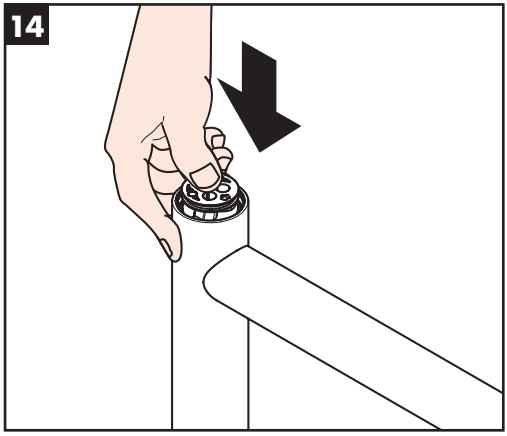
14

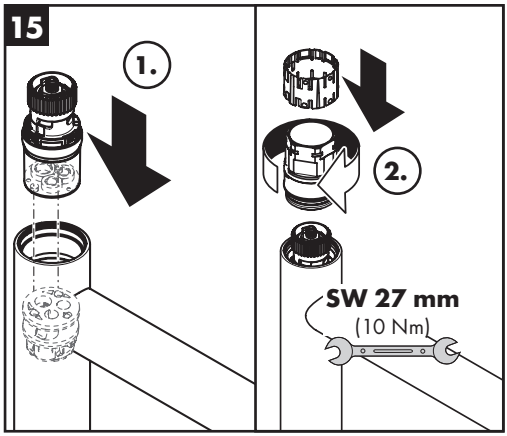
15
1.
2.
SW 27 mm
(10 Nm)

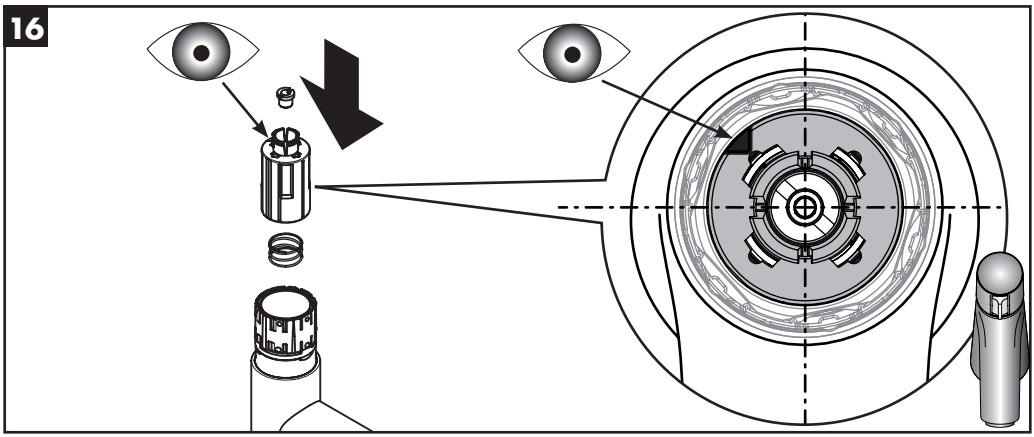
16

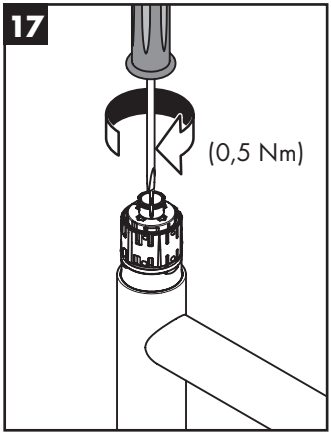
17
(0,5 Nm)

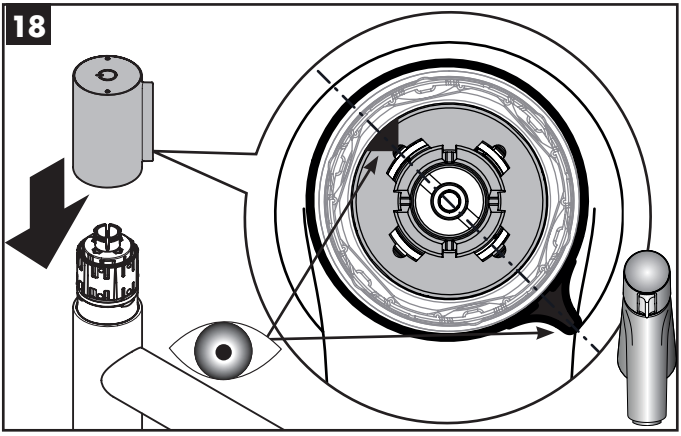
18

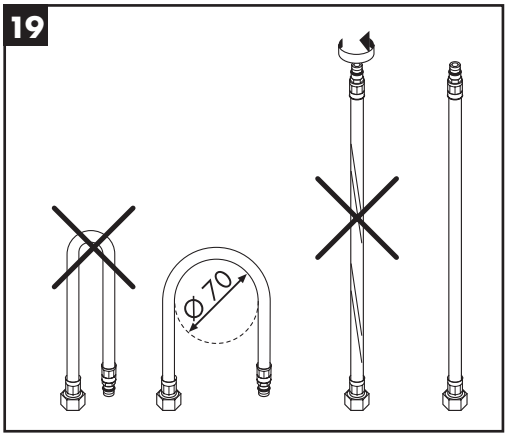
19
Ø 70

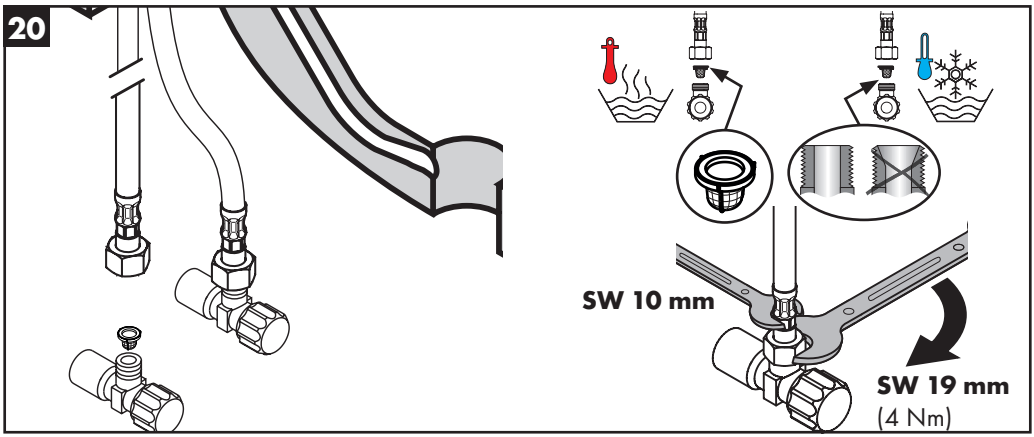
20
SW 10 mm
SW 19 mm
(4 Nm)

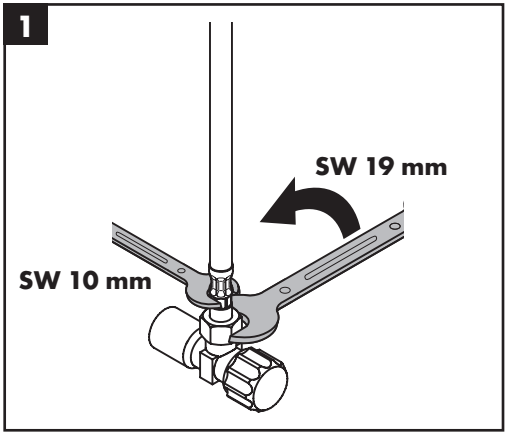
1
SW 19 mm
SW 10 mm

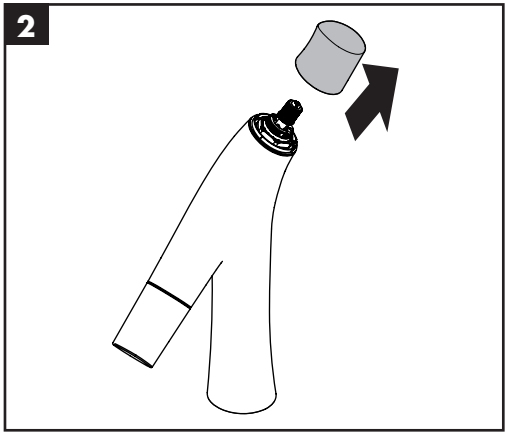
2

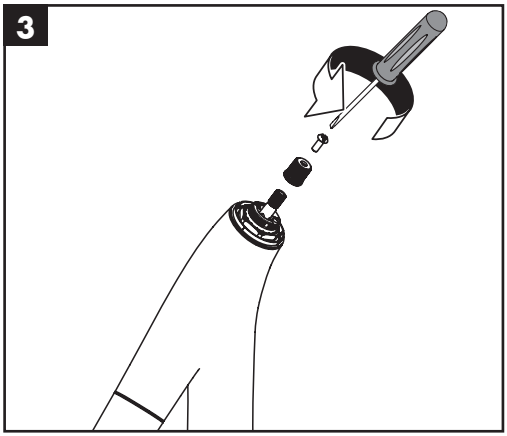
3

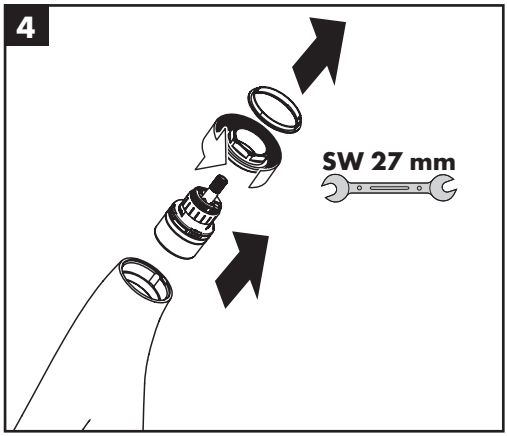
4
SW 27 mm

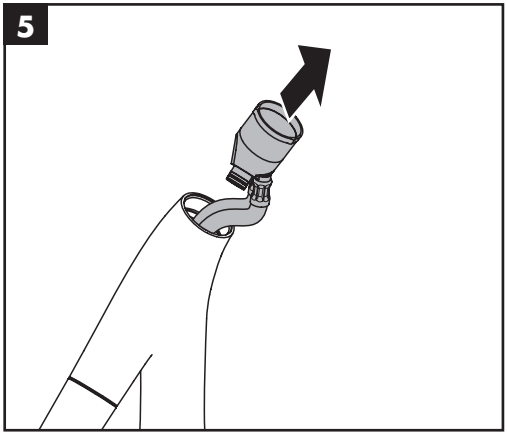
5

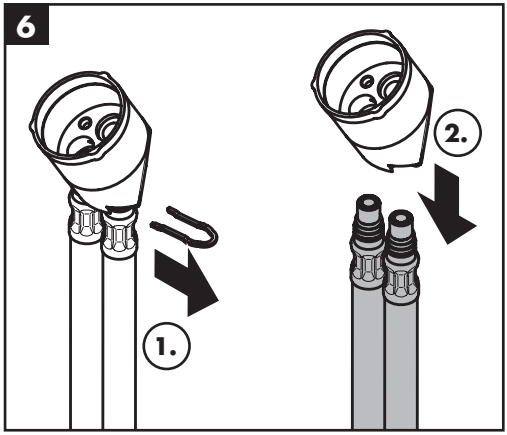
6
1.
2.

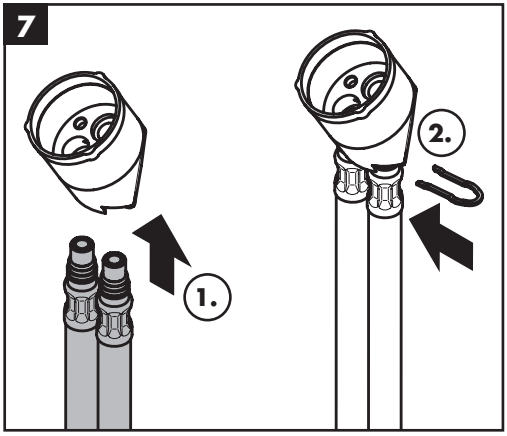
7
1.
2.

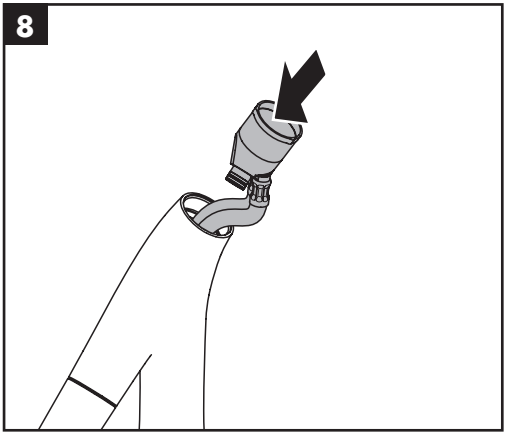
8

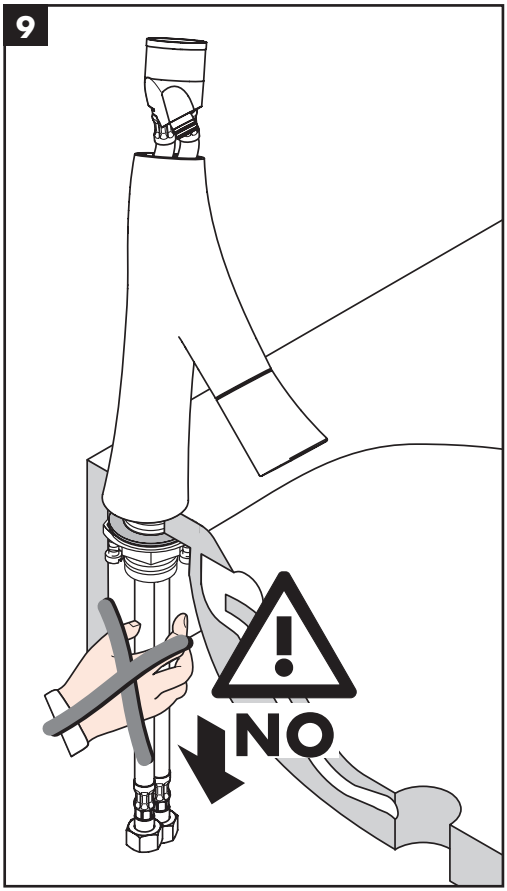
9
NO

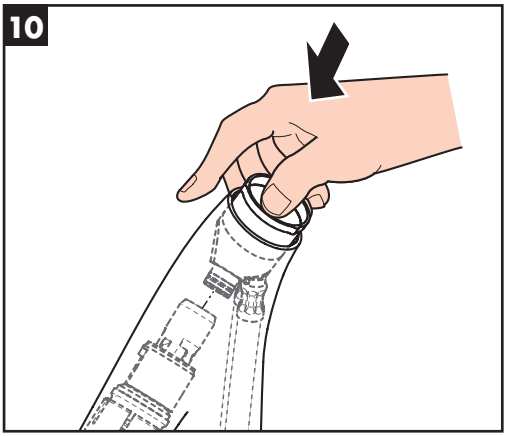
10

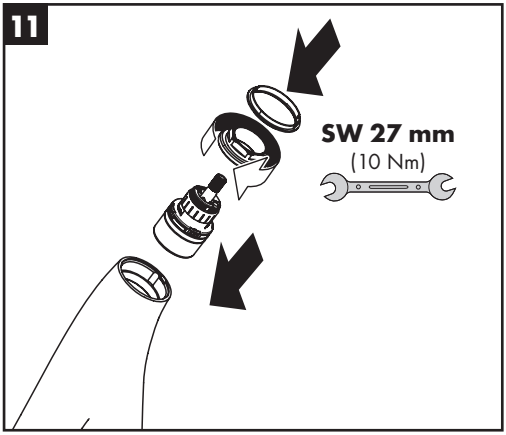
11
SW 27 mm
(10 Nm)

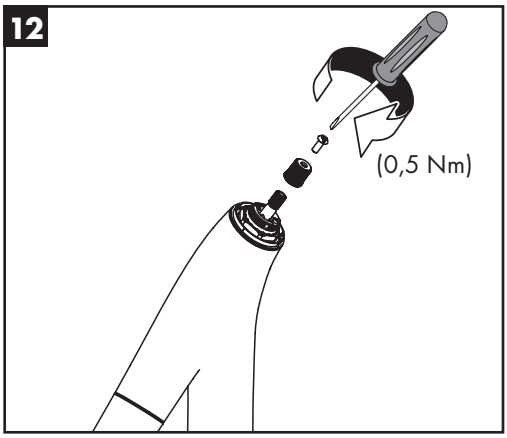
12
(0,5 Nm)

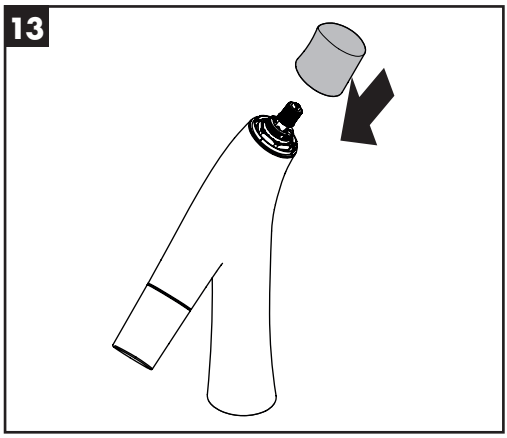
13

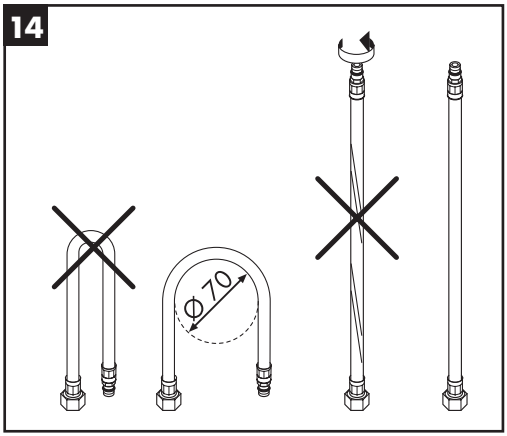
14
Ø70

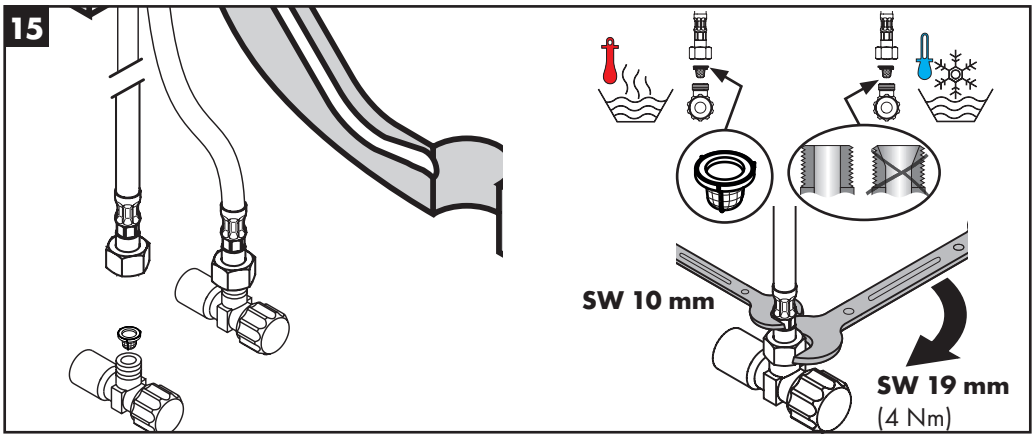
15
SW 10 mm
SW 19 mm
(4 Nm)

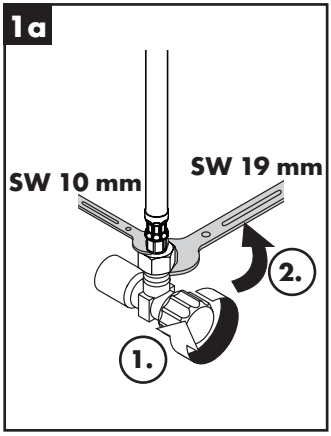
1a
SW 10 mm
SW 19 mm
2.
1.

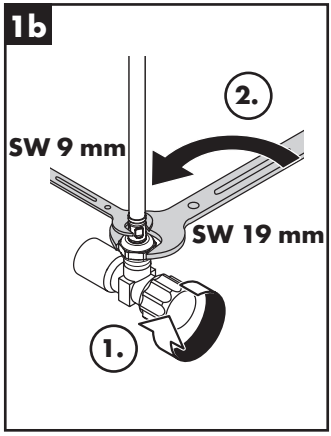
1b
2.
SW 9 mm
SW 19 mm
1.

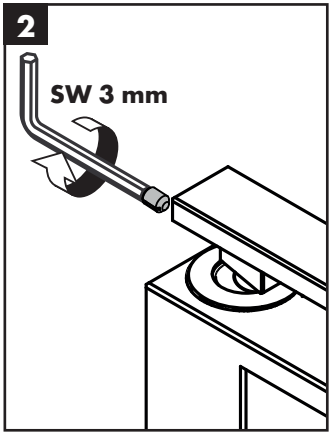
2
SW 3 mm

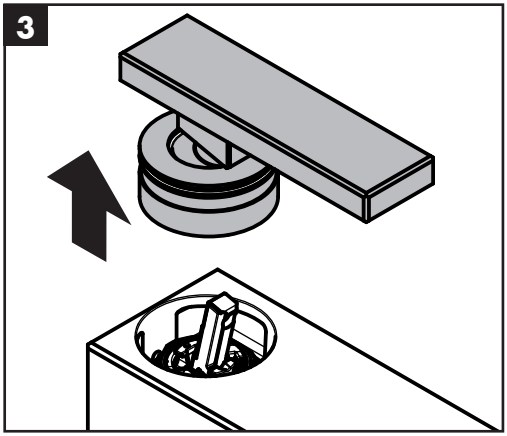
3

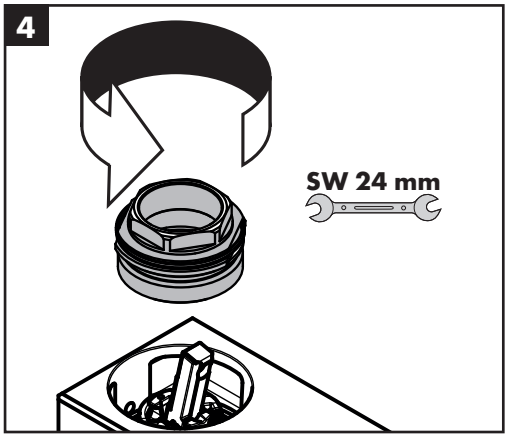
4
SW 24 mm

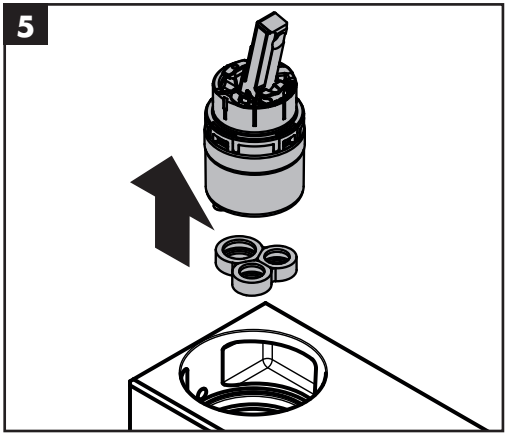
5

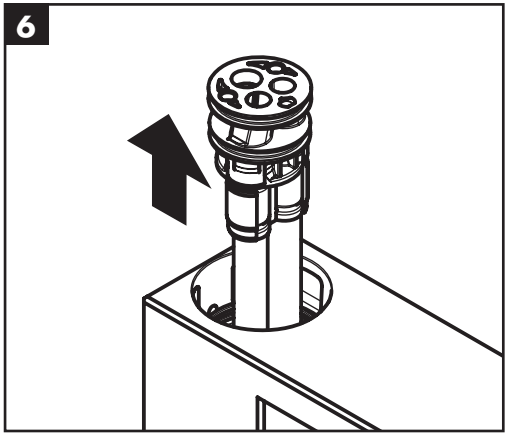
6

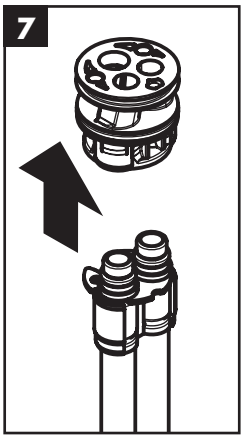
7

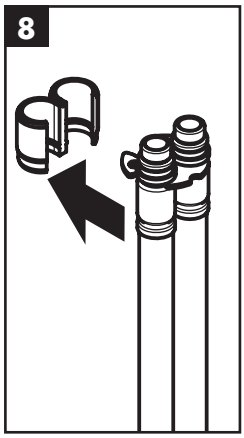
8

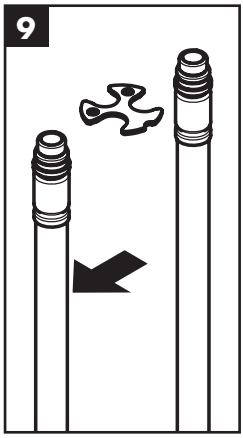
9

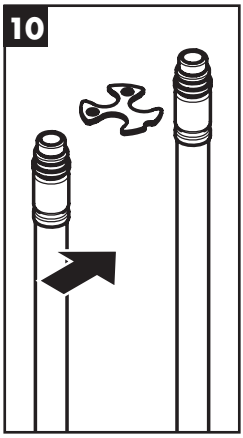
10

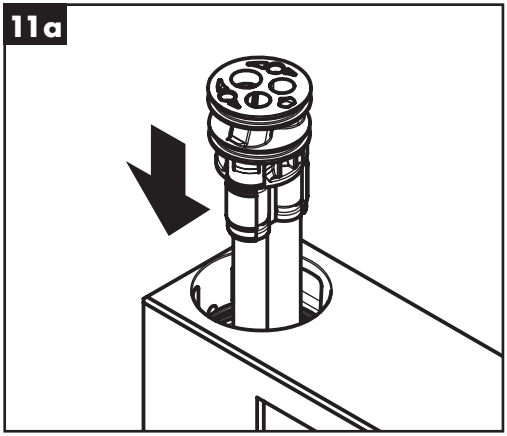
11a

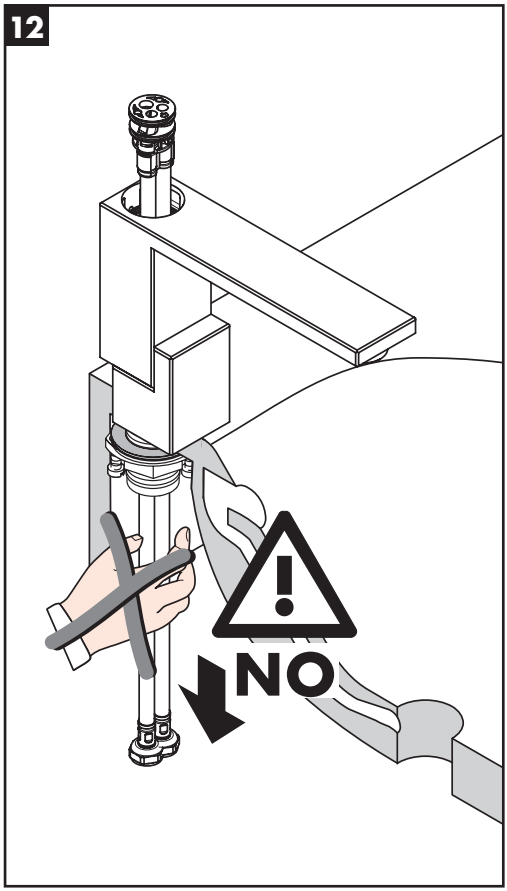
12
NO

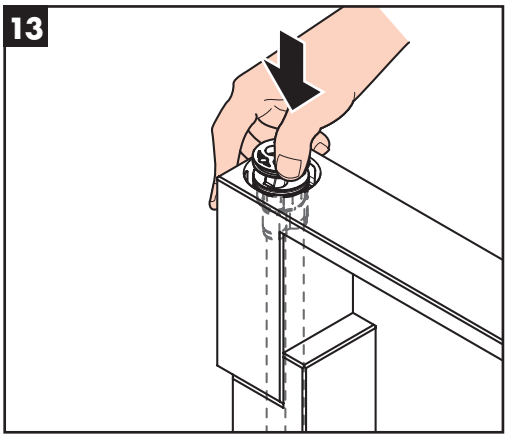

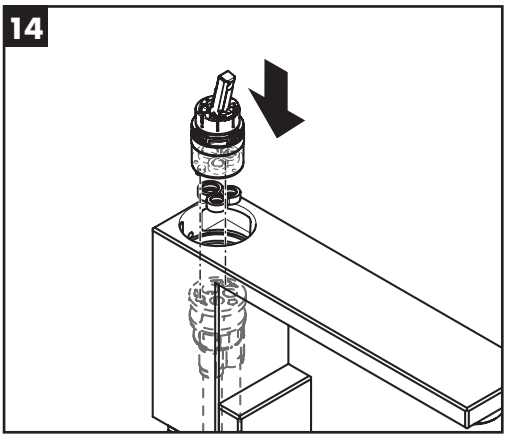

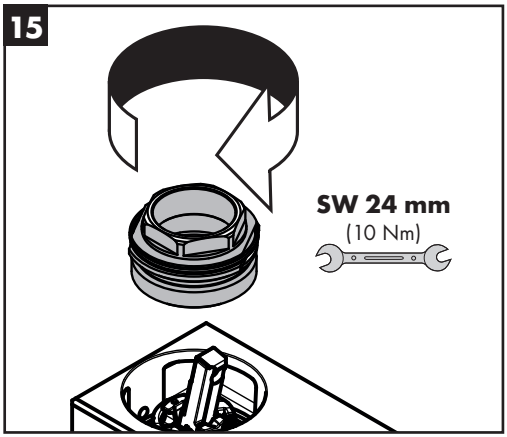

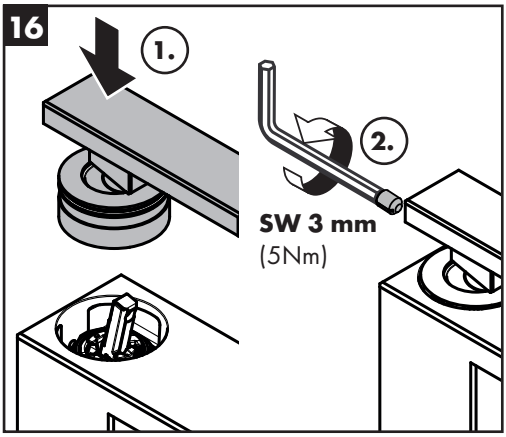

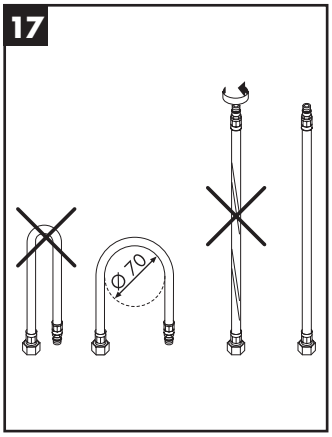

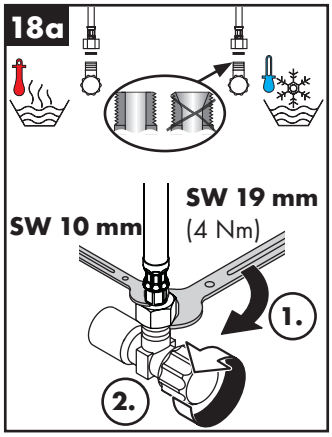

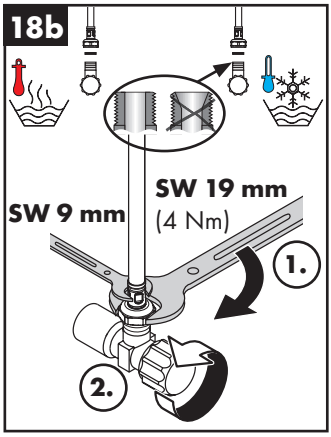

hansgrohe
Hansgrohe · Auestraße 5 - 9 · D-77761 Schiltach · Telefon +49 (0) 78 36/51-1282 · Telefax +49 (0) 7836/511440
E-Mail: info@hansgrohe.com · Internet: www.hansgrohe.com

03/2024
9.05761.03