hansgrohe

ZH 用户手册 / 组装说明 **2**

EN Instructions for use / assembly instructions **3**

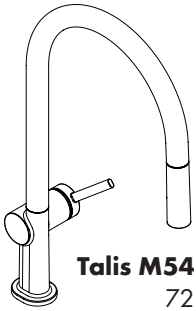

Talis M54 210 1jet sBox
72803XX7

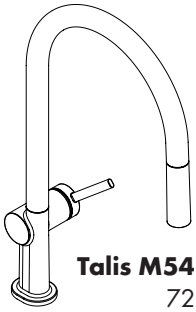

Talis M54 210 2jet sBox
72801XX7

Talis M54 270 1jet sBox
72809XX7

⚠ 安全技巧

⚠ 装配时为避免挤压和切割受伤，必须戴上手套。

⚠ 冷热水管间过大的压力差必须予以平衡。

安装提示

- 安装前必须检查产品是否受到运输损害。 安装后将不认可运输损害或表面损伤。
- 管道和阀门必须根据通用标准进行安装、冲洗和检查。
- 请遵守当地国家现行的安装规定。

技术参数

工作压强:	最大 1 MPa
推荐工作压强:	0,1 - 0,5 MPa
测试压强:	1,6 MPa
	(1 MPa = 10 bar = 147 PSI)
热水温度:	最大 70°C
推荐热水温度:	65°C
热力消毒:	最大 70°C / 4 分钟

该产品专为饮用水设计！

符号说明

请勿使用含有乙酸的硅胶！

调节 (参见第页 13)

热水温度调节。如果使用即热式喷头，则不建议安装热水阀门。

保养 (参见第页 23)

单向阀必须在符合国家或当地的法律的情况下按照DIN EN 1717定期检查 (至少一年一次) 。

大小 (参见第页 14)

流量示意图 (参见第页 14)

备用零件 (参见第页 20)

XX = 颜色代码
00 = 镀铬
67 = Matt Black

选装附件 (不在供货范围内)

F12 加长件 #43333000 (参见第页 19)

清洗 (参见第页 16)

操作 (参见第页 18)

汉斯格雅建议，清晨或在水流长时间停滞后，前半升水不作饮用水使用。

问题	原因	补救
龙头出水量小	- 通风机结垢、脏污	- 检查通风机，视需要更换
龙头不灵活	- 阀芯损坏，结垢	- 更换阀芯
龙头滴水	- 阀芯损坏	- 更换阀芯
水从螺纹底座中流出	- 连接软管的○形环损坏	- 更换○形环
热水温度过低	- 温度限制器设置错误	- 设置温度限制器

安装 (参见第页 4)

⚠ Safety Notes

⚠ Gloves should be worn during installation to prevent crushing and cutting injuries.

⚠ The hot and cold supplies must be of equal pressures.

Installation Instructions

- Prior to installation, inspect the product for transport damages. After it has been installed, no transport or surface damage will be honoured.
- The pipes and the fixture must be installed, flushed and tested as per the applicable standards.
- The plumbing codes applicable in the respective countries must be observed.

Technical Data

Operating pressure:	max. 1 MPa
Recommended operating pressure:	0,1 - 0,5 MPa
Test pressure:	1,6 MPa
	(1 MPa = 10 bar = 147 PSI)
Hot water temperature:	max. 70°C
Recommended hot water temp.:	65°C
Thermal disinfection:	max. 70°C / 4 min

The product is exclusively designed for drinking water!

Symbol description

Do not use silicone containing acetic acid!

Adjustment (see page 13)

To adjust the hot water limiter. Using a hot water limiter in combination with a continuous flow water heater is not recommended.

Maintenance (see page 23)

The check valves must be checked regularly according to DIN EN 1717 in accordance with national or regional regulations (at least once a year).

Dimensions (see page 14)

Flow diagram (see page 14)

Spare parts (see page 20)

XX = Colors
00 = Chrome Plated
67 = Matt Black

Special accessories (order as an extra)

F12 extension #43333000 (see page 19)

Cleaning (see page 16)

Operation (see page 18)

Hansgrohe recommends not to use as drinking water the first half liter of water drawn in the morning or after a prolonged period of non-use.

Fault	Cause	Remedy
Insufficient water	- Aerator calcified, dirty	- Clean aerator, replace as necessary
Mixer stiff	- Cartridge defective, calcified	- Exchange cartridge
Mixer dripping	- Cartridge defective	- Exchange cartridge
Water escaping at the threaded base	- O-ring at the connection hose defective.	- Exchange O-ring
Hot water temperature too low	- Hot water limiter incorrectly set	- Set hot water limiter

Assembly (see page 4)

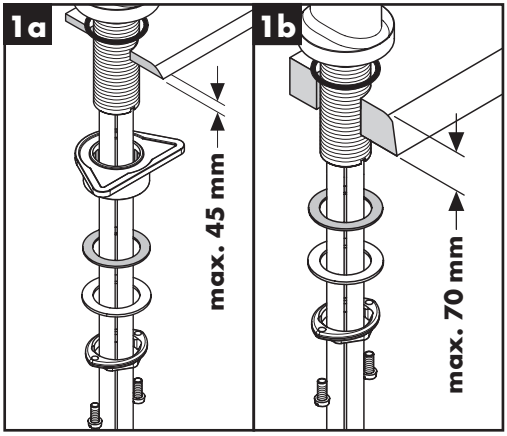
1a
1b
max. 45 mm
max. 70 mm

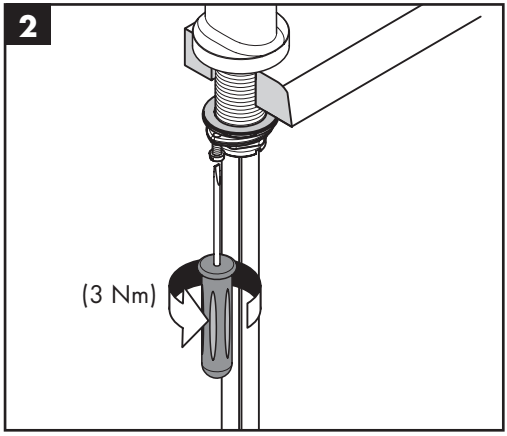
2
(3 Nm)

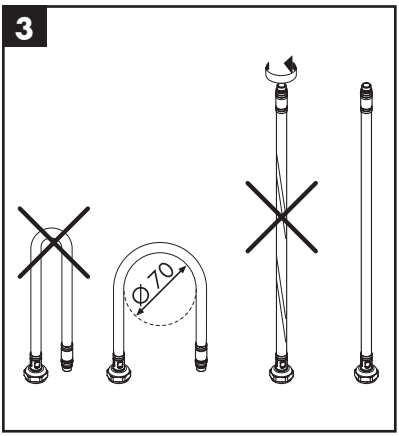
3
ø70

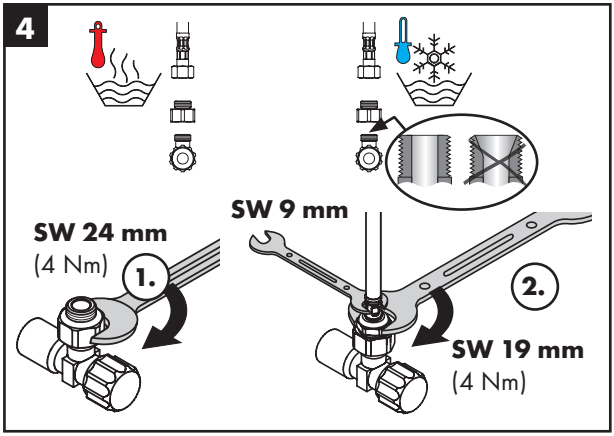
4
SW 24 mm
(4 Nm)
1.
SW 9 mm
2.
SW 19 mm
(4 Nm)

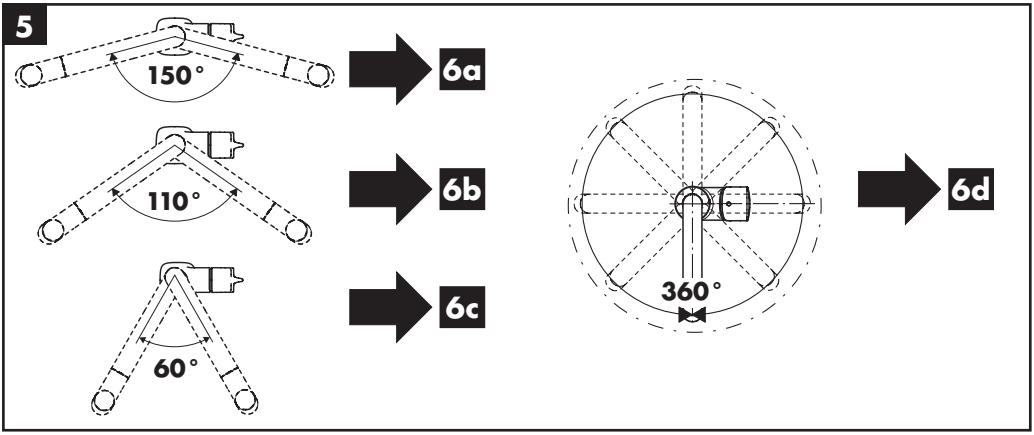
5
150°
110°
60°
6a
6b
6c
360°
6d

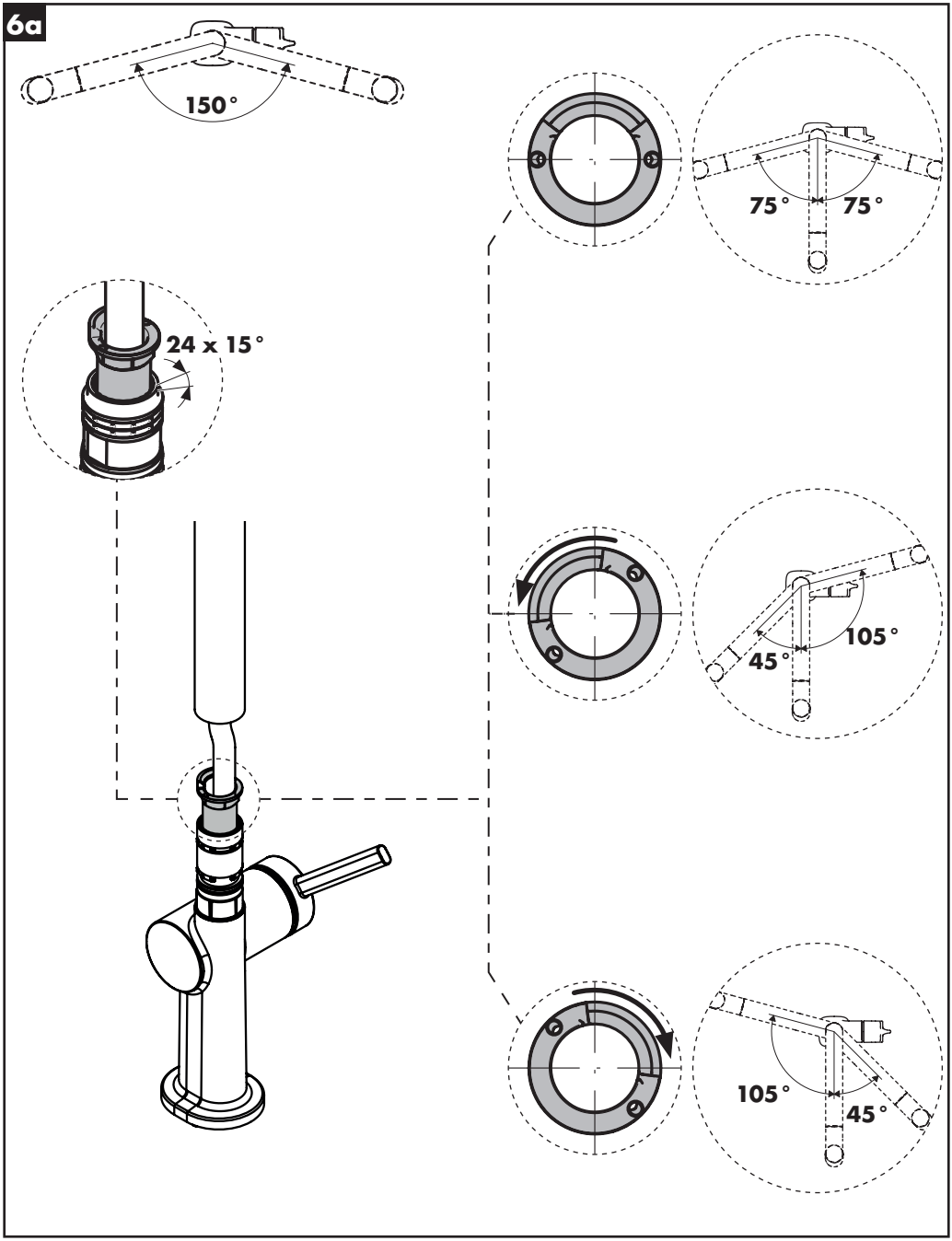
6a
150°
75°
75°
24 x 15°
105°
45°
105°
45°

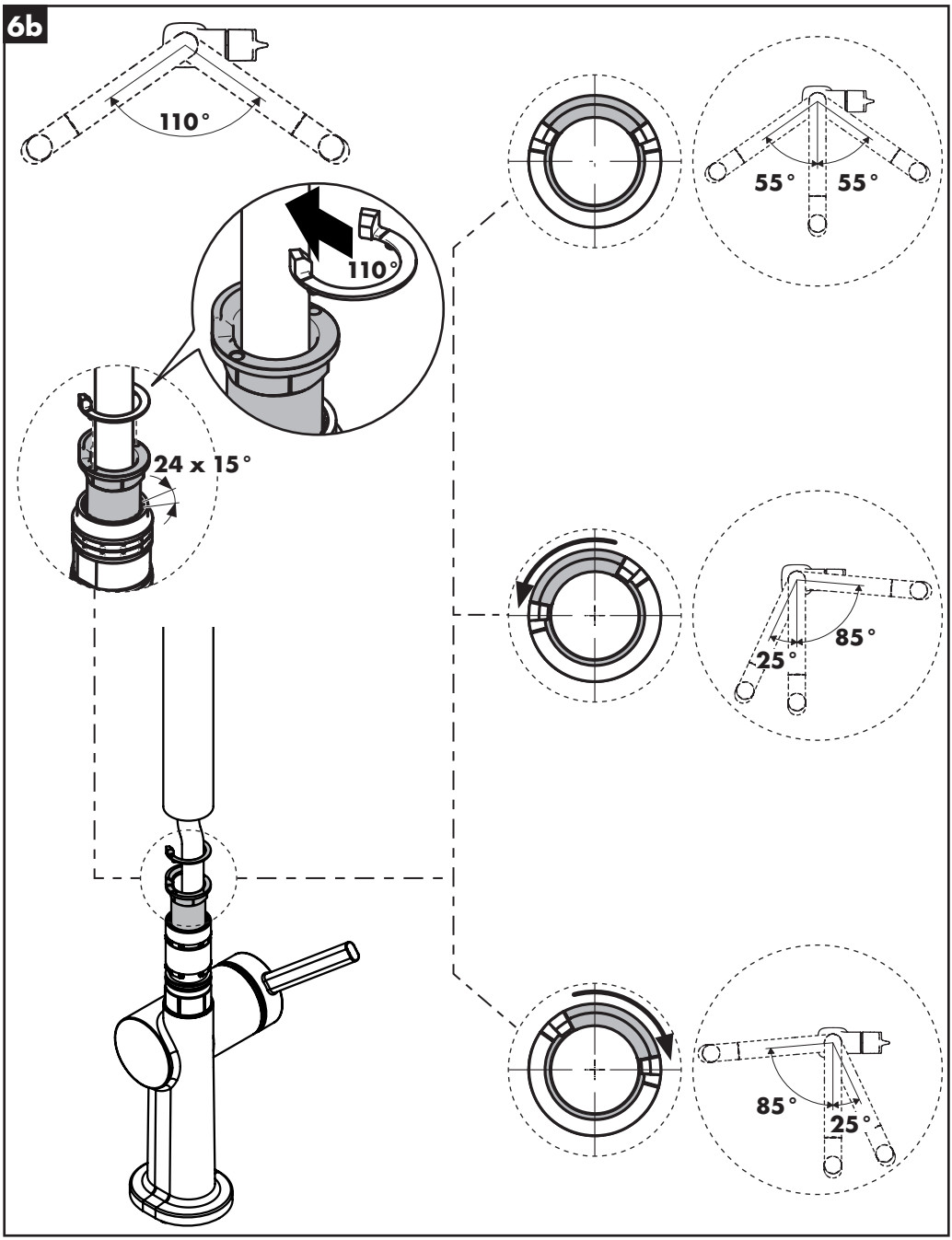
6b
110°
110°
24 x 15°
55°
55°
85°
25°
85°
25°

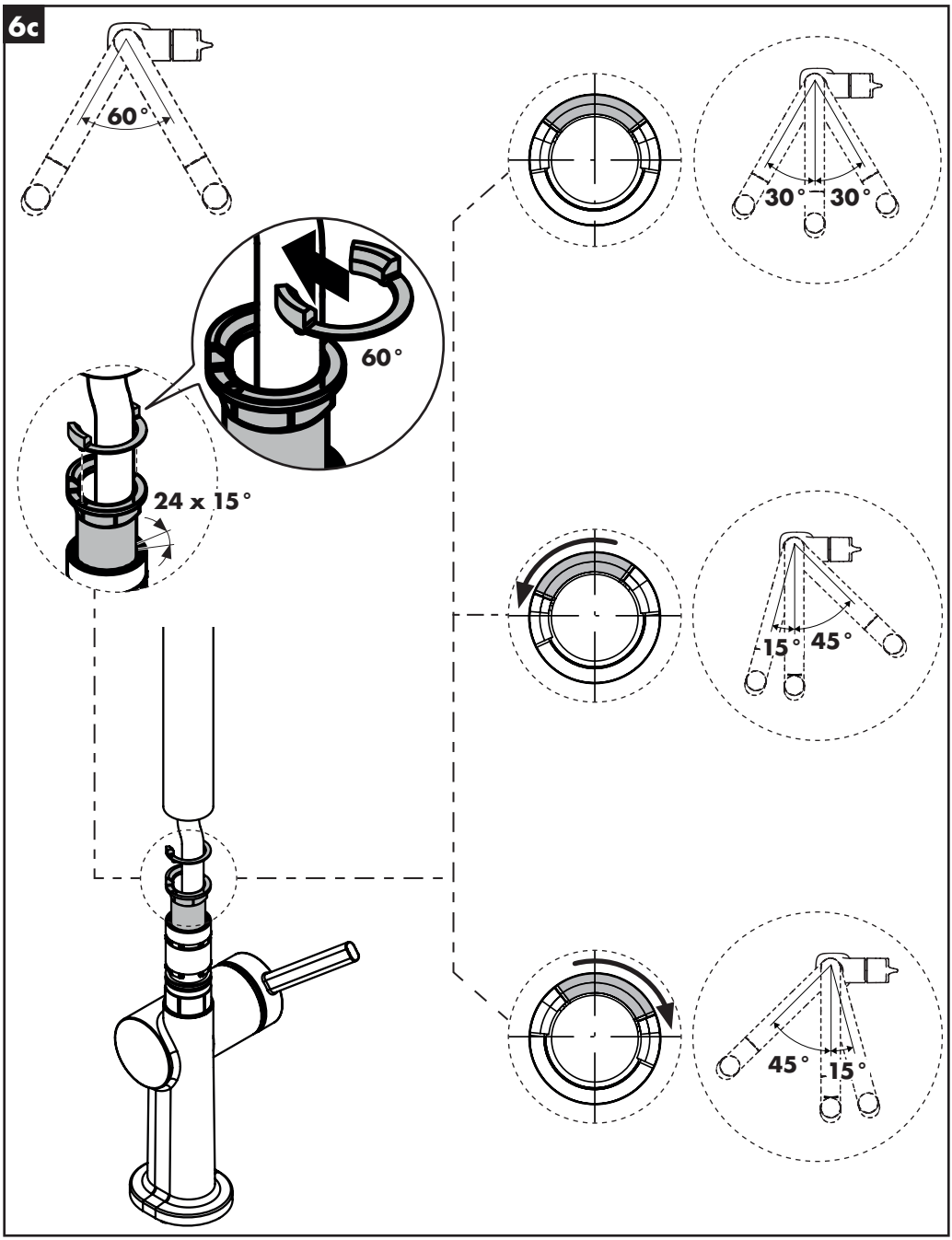
6c
60°
60°
24 x 15°
30°
30°
15°
45°
45°
15°

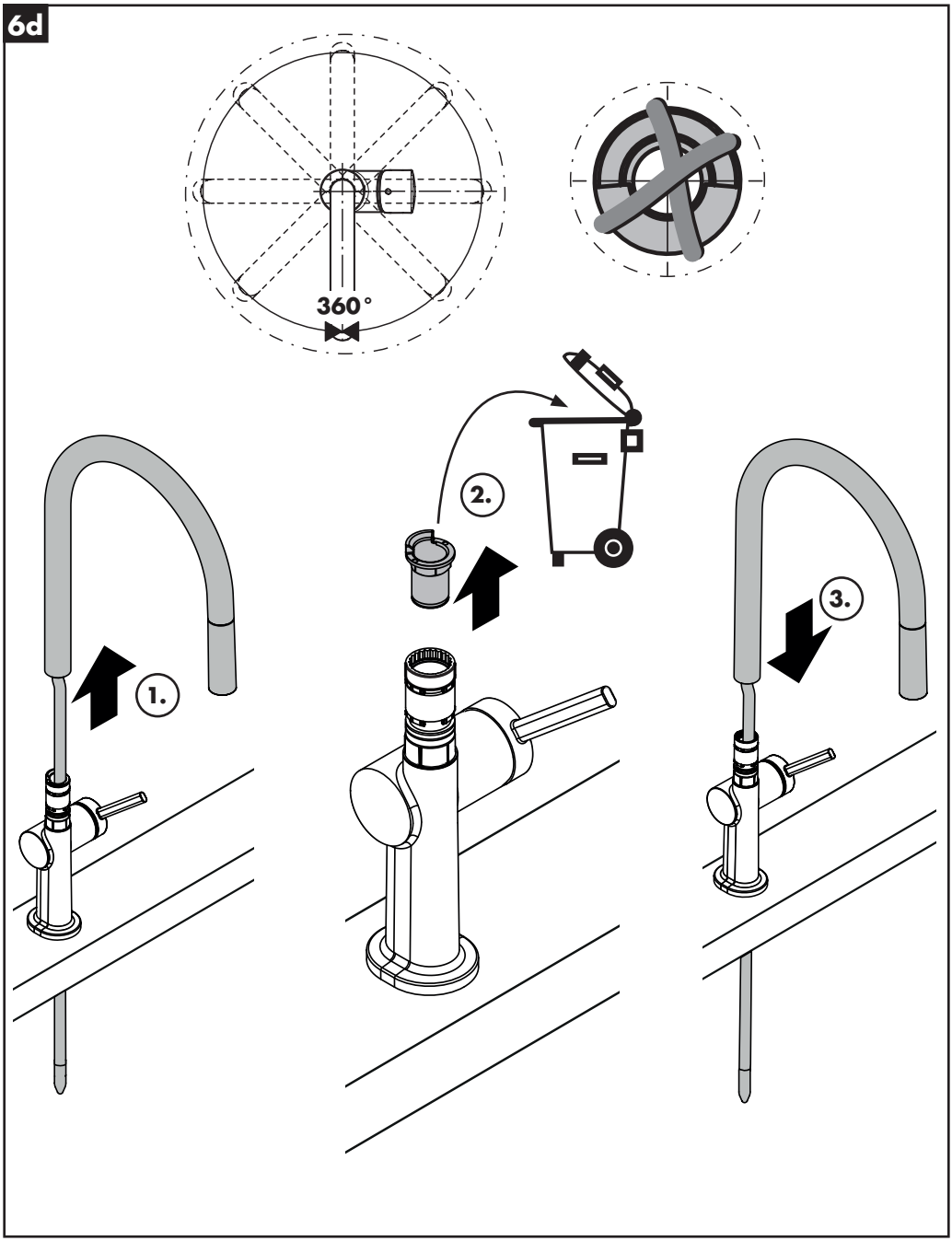
6d
360°
1.
2.
3.

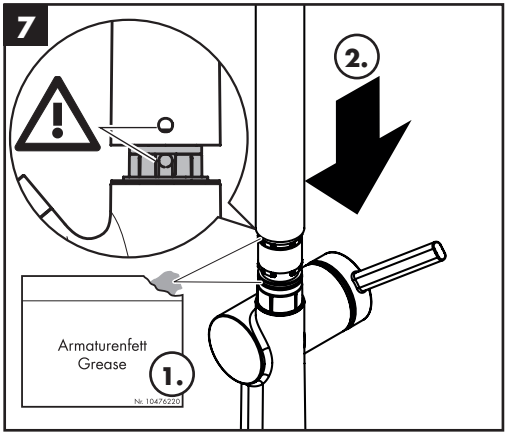
7
2.
Armaturenfett
Grease
1.
Nr. 10476220

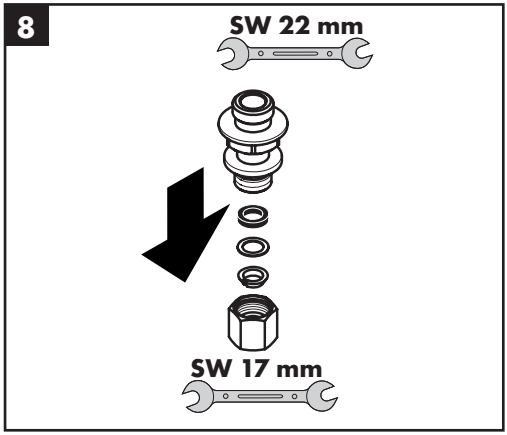
8
SW 22 mm
SW 17 mm

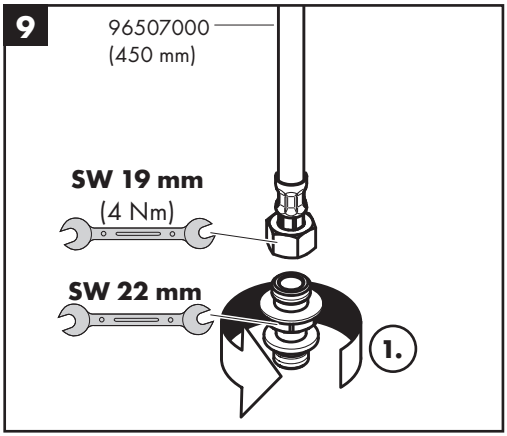
9
96507000
(450 mm)
SW 19 mm
(4 Nm)
SW 22 mm
1.

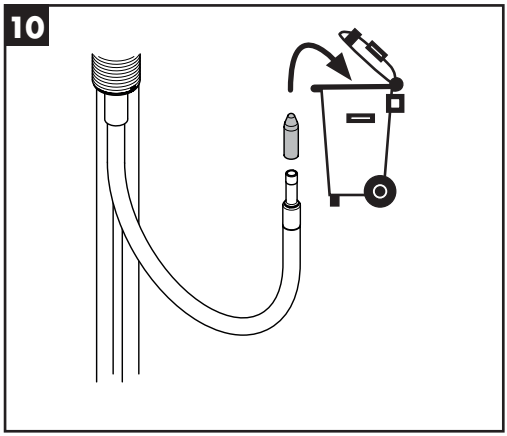
10

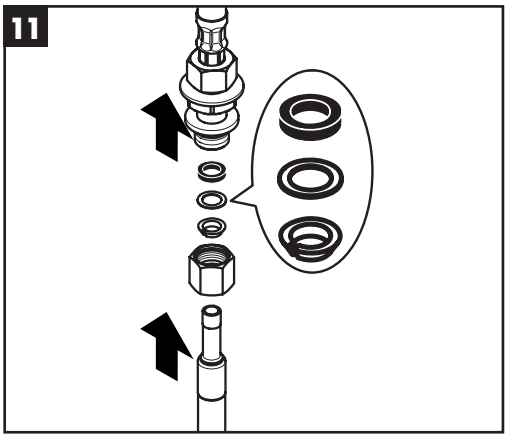
11

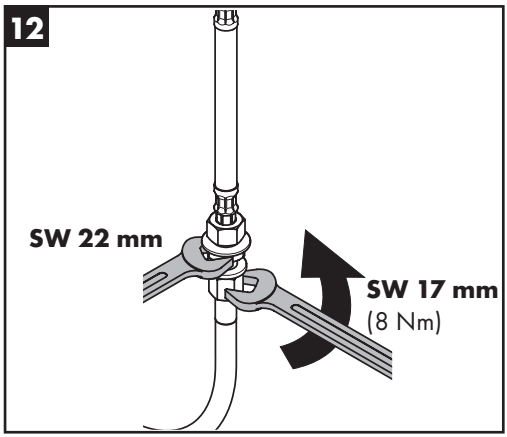
12
SW 22 mm
SW 17 mm
(8 Nm)

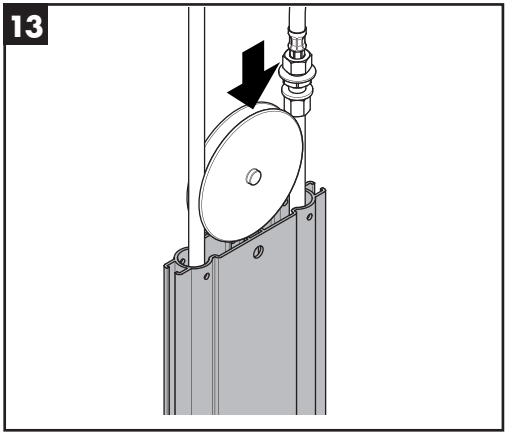
13

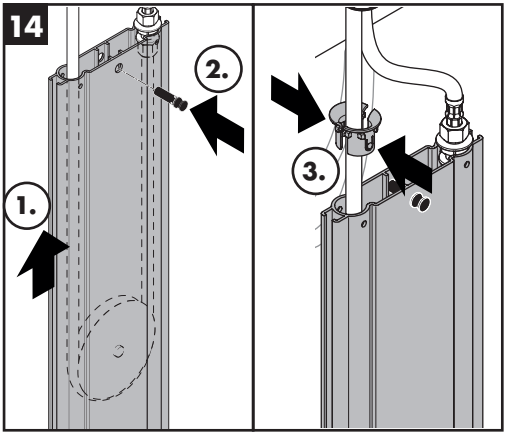
14
2.
1.
3.

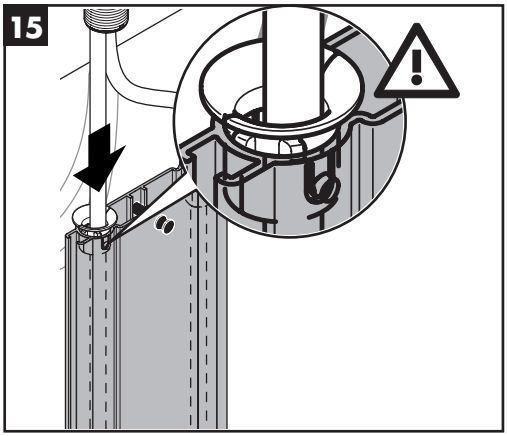
15

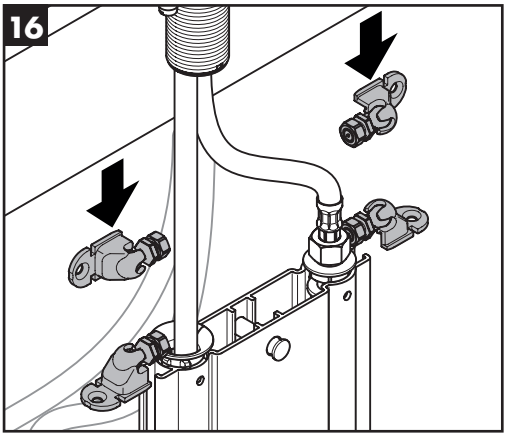
16

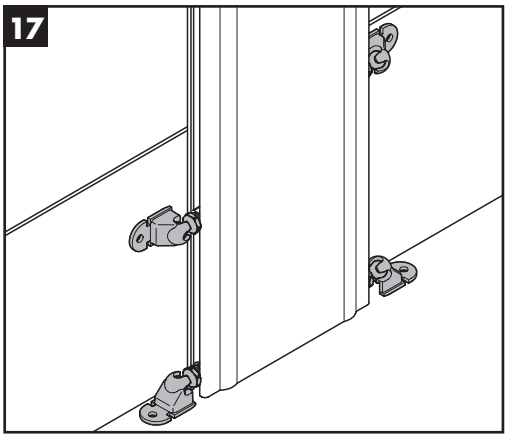
17

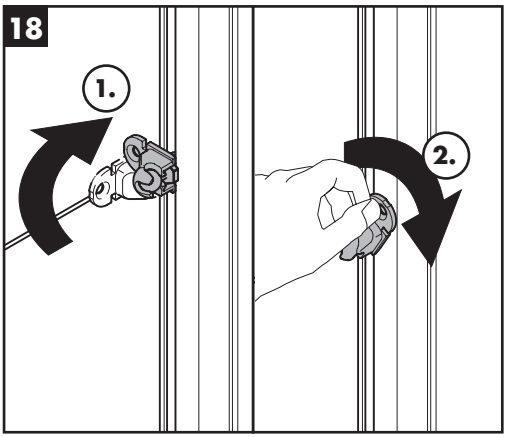
18
1.
2.

19

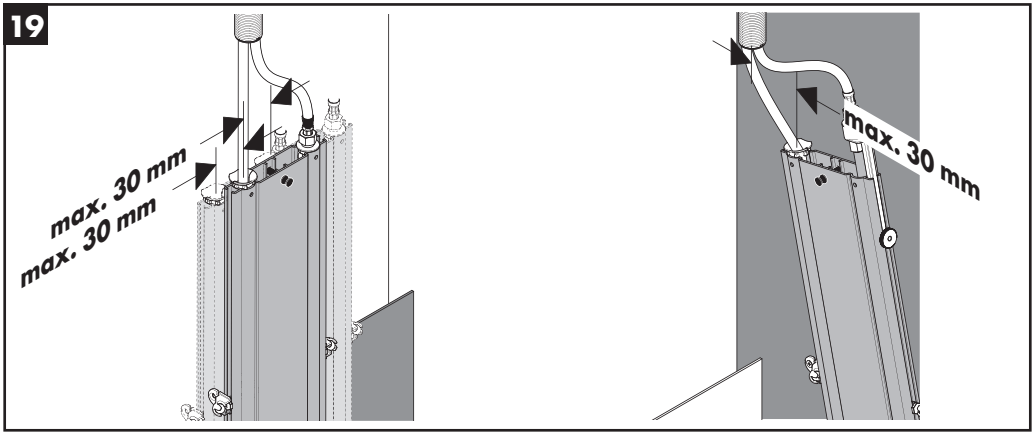

20a

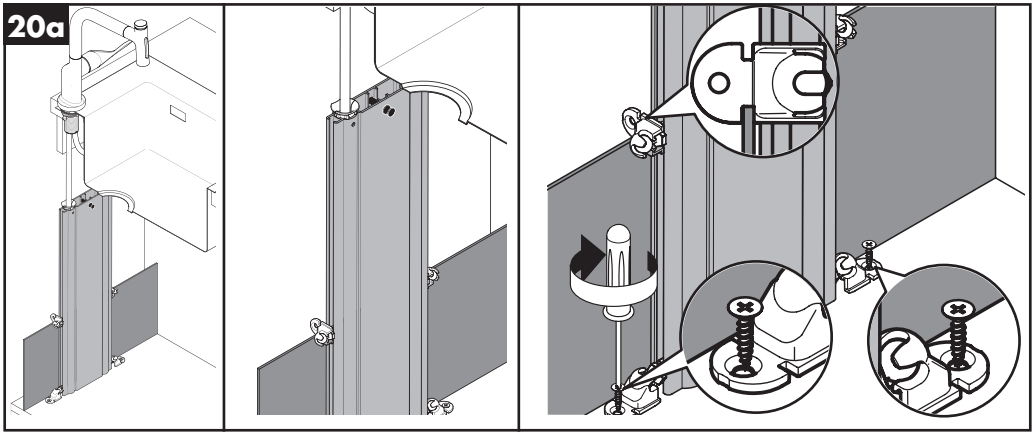

20b

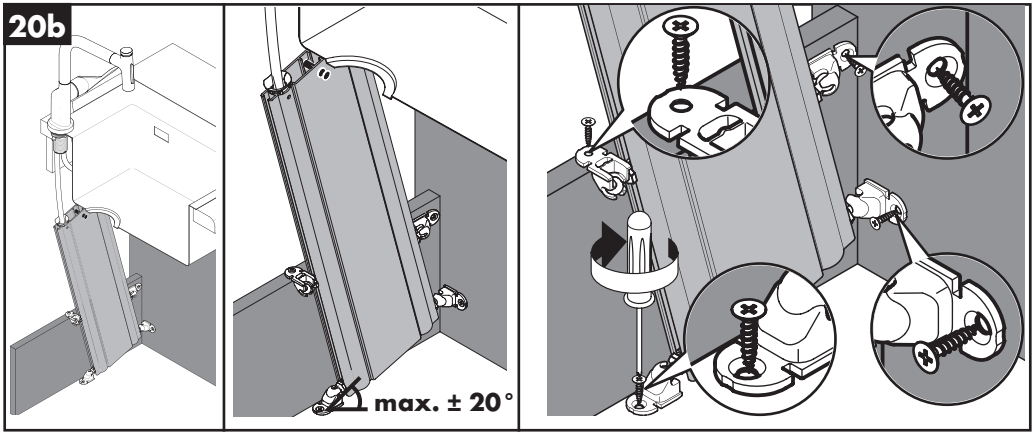

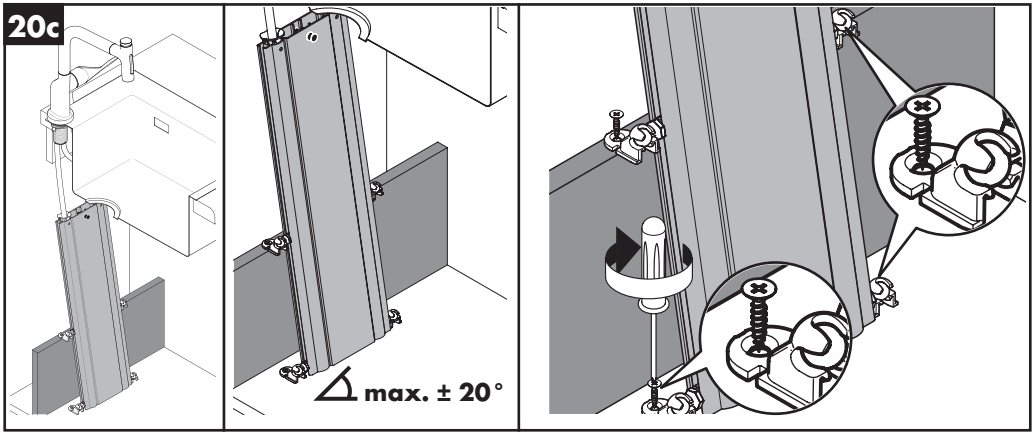
20c
max. ± 20°

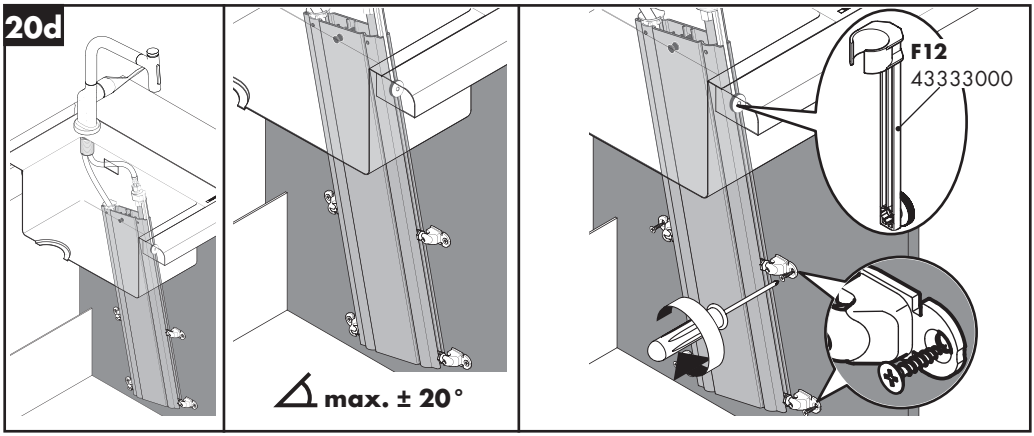
20d
max. ± 20°
F12
43333000

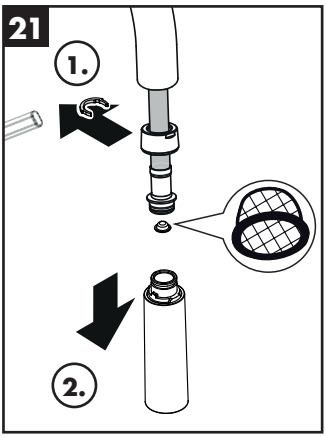
21
1.
2.

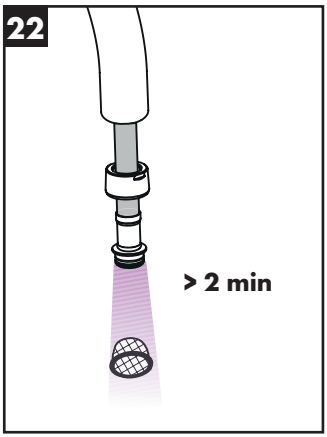
22
> 2 min

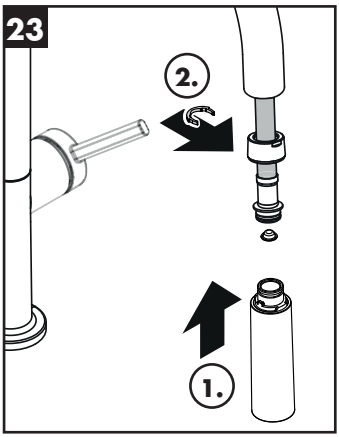
23
2.
1.

60 °C

10 °C

0,3 MPa

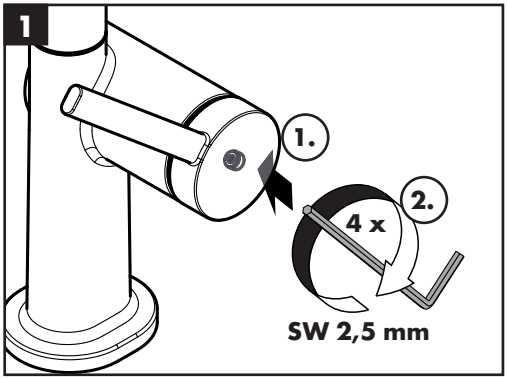
1
1.
2.
4 x
SW 2,5 mm

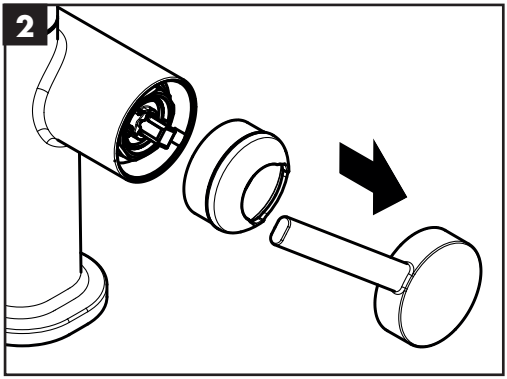
2

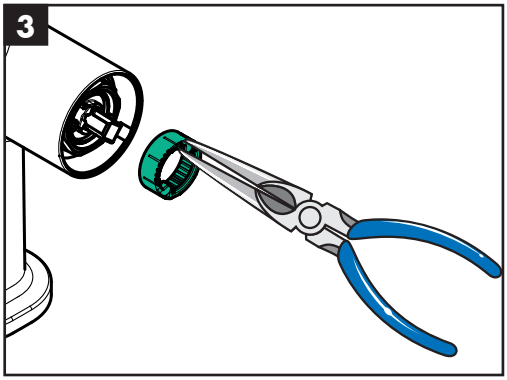
3

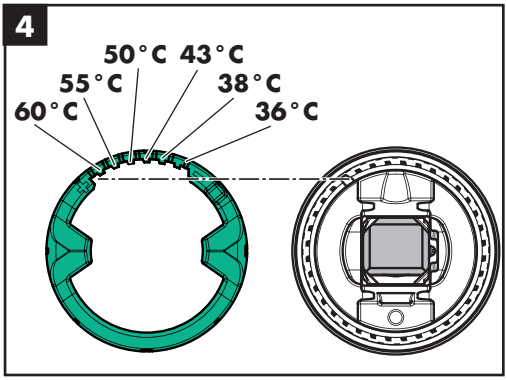
4
50 °C
43 °C
55 °C
38 °C
60 °C
36 °C

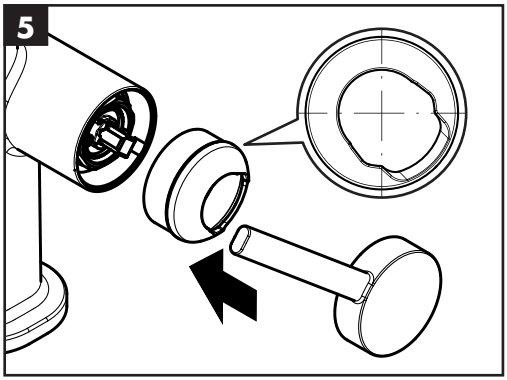
5

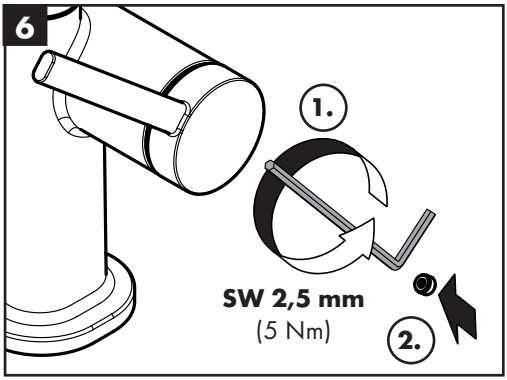
6
1.
SW 2,5 mm
(5 Nm)
2.

Talis M54 210 1jet sBox
72803XX7

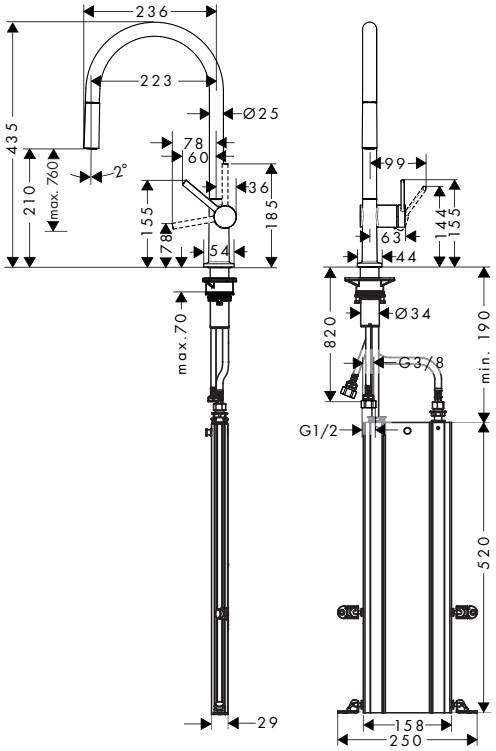

Talis M54 270 1jet sBox
72809XX7

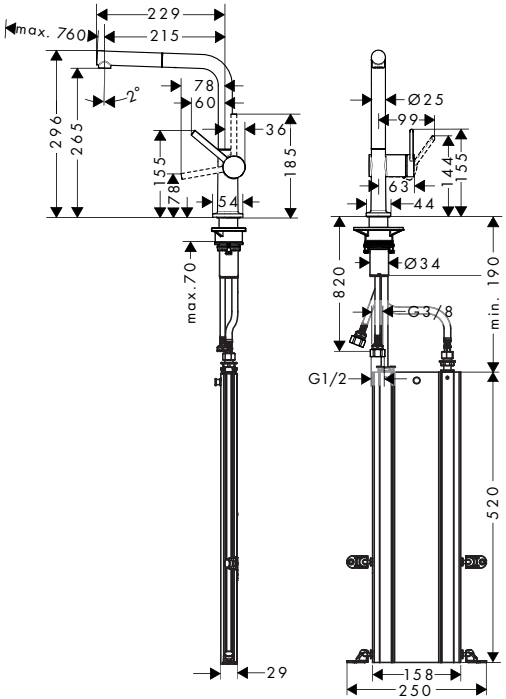

Talis M54 210 1jet sBox
72803XX7

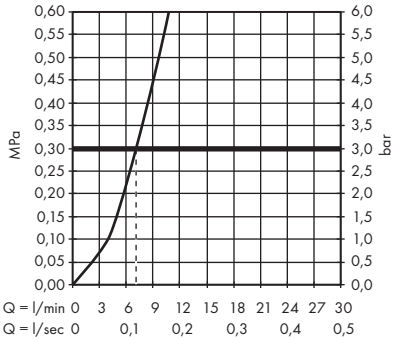

Talis M54 270 1jet sBox
72809XX7

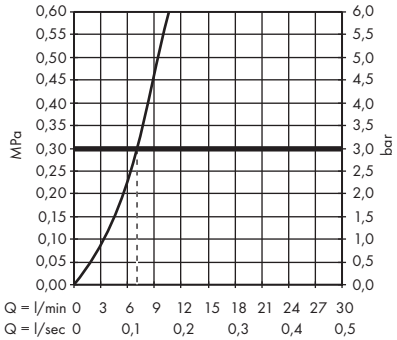

Talis M54 210 2jet sBox

72801XX7

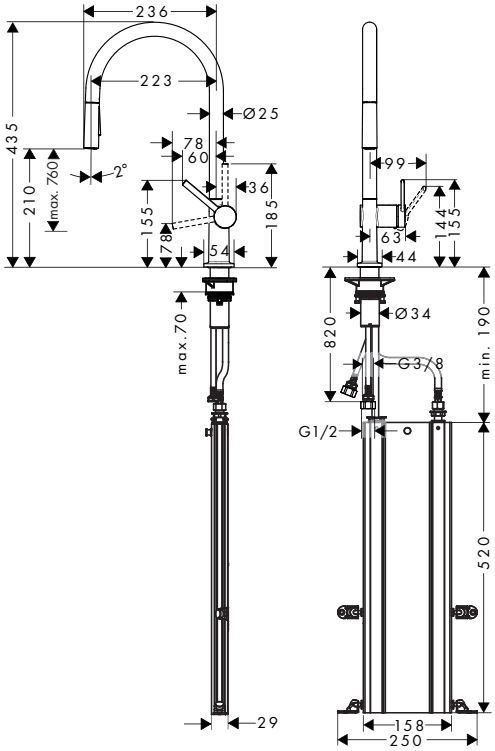

sBox

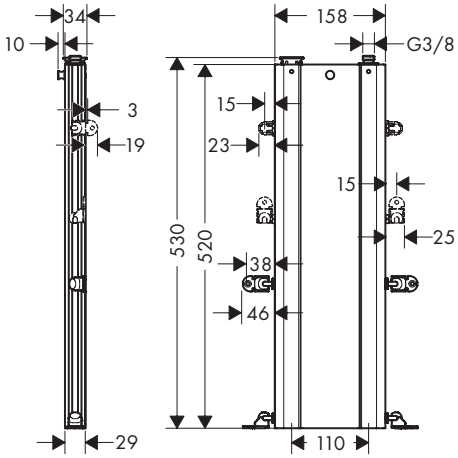

Talis M54 210 2jet sBox

72801XX7

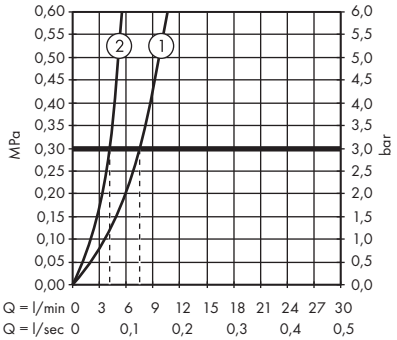

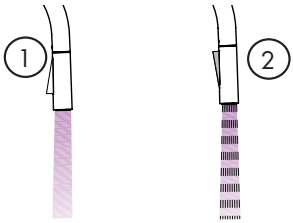

汉斯格雅产品的清洁建议

现代的卫浴龙头、厨房龙头、花洒、配件、盥洗台、浴盆和加热器采用的制造材料非常迥异，以适应产品外形设计和使用功能的市场需求。

为了避免产品损坏和由此引发的投诉及争议，必须在使用和清洁产品时遵循有关规程。

在保养汉斯格雅产品时，原则上必须注意:

- 只能使用那些有明确注明是适用于本产品的清洁剂。
- 不允许使用含有盐酸、蚁酸、氯漂或醋酸的清洁剂，因为这些清洁剂会给产品表面造成严重的损伤。
- 含磷酸的清洁剂必须在特定条件下使用。
- 不允许将两种以上清洁剂混合使用。
- 不允许使用具有研磨作用的清洁工具和设备，如不适合的清洁粉末、海绵垫或超细麦克布。
- 必须严格遵守清洁剂生产厂商的使用说明。
- 严格遵守清洁剂的用量和作用时间，决不允许清洁剂的作用时间长于规定值。
- 定期的清洁以预防水垢。
- 不允许将清洁剂直接喷射到汉斯格雅产品上，因为喷雾会进入汉斯格雅产品的开口部分和缝隙中而造成损害。首先将清洁剂喷在软布上，再用软布进行清洁。
- 清洁之后必须用足够的清水冲洗，以彻底去除残留的吸附物（清洁剂）。
- 不允许使用蒸汽清洗机，高温会损害产品。

重要说明
肥皂，洗发水、沐浴液、染发剂、香水、刮胡水、指甲油的残留也会对产品造成损伤。

此处：使用后要小心地用清水将剩余物冲洗干净。

同样在产品下方不得存放洗涤剂和化学药品，例如不可放在用于洗脸盆的梳洗柜中否则挥发气体将损坏产品。

在已经损伤的表面继续使用清洁剂会给表面造成更大的损伤。

表面损坏的部件必须更换，否则会有受伤的危险。

不按规定进行清洁而造成的任何损坏不在本公司产品保修范围之内。

QuickClean

有了QuickClean，**手工清洁功能，要去掉喷头上的水垢，只需简单地搓除即可**。

担保

Hansgrohe 向用户保证，该产品无制造 缺陷。如果自购买之日起五年内出现缺陷，Hansgrohe 将免费排除。 保证条件和详 情见 www.hansgrohe-int.com/guarantee。 在提 出保修的权利时请联系您的合同方。本保证 不涉及有关国家法律规定的消费权

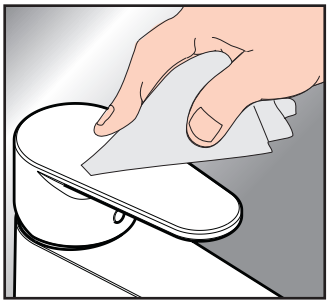

Cleaning Recommendation for Hansgrohe Products

Today, modern sanitary and kitchen tapware, showers, accessories, washstands, tubs and radiators consist of very different materials to comply with the needs of the market with regard to design and functionality.

To avoid damage and reclamations, it is necessary to consider certain criteria when cleaning.

With regard to caring for the Hansgrohe products, the following must in principle be heeded:

- Only use cleaning material which is explicitly provided for this type of application.
- Never use cleaning materials, which contain hydrochloric acid, formic acid, chlorine pale lye or acetic acid, as they cause considerable damage.
- Phosphorus acidic cleaners are only conditionally applicable.
- Mixing cleaning agents is not permitted, generally.
- Never use cleaning materials or appliances with an abrasive effect, such as unsuitable cleaning powders, sponge pads or micro fibre cloths.
- The instructions of the cleaning agent manufacturers have to be followed absolutely.
- Cleaning has to be carried out with a specified cleaner dosage, contact time, object-related and adapted to the needs.
- The building up of calcifications has to be removed by cleaning regulary.
- When using spray cleaners, spray the cleaning solution onto a soft cloth or sponge, never directly onto the Hansgrohe products, as the atomised spray could enter openings and gaps in the Hansgrohe products and cause damage.
- After cleaning rinse thoroughly with clean water to remove any cleaner residue.
- The use of steam cleaners is not permitted. The high temperatures can damage the products.

Important

Residues of toiletries such as liquid soaps, shampoos and shower gels, hair dyes, perfumes, aftershave and nail varnish can also cause damage.

Here too: Carefully rinse with water after use to remove residues.

Likewise, do not store any cleaning agents or chemicals under the products, for example in a vanity unit, as the vapours may damage the products.

The damage of already damaged surfaces will deteriorate under the effect of the cleansers.

Components with damaged surfaces must be exchanged, otherwise there could be an injury danger.

Damage caused by improper treatment will not be covered by our guarantee.

QuickClean

The QuickClean cleaning function only needs a small manual rub over to remove the lime scale from the spray channels.

Warranty

Hansgrohe guarantees to the consumer that this product is free of production faults. If evertheless any defect is detected within 5 years from date of purchase, Hansgrohe will remedy this defect free of charge. You will find the conditions and details of this guarantee at www.hansgrohe-int.com/guarantee. Please contact your contracting party to claim your rights under this guarantee. This guarantee does not affect the customer's rights under the respective national legislation.

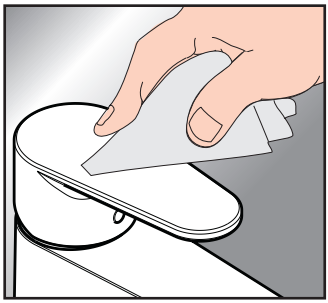

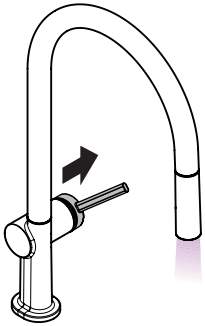

开 / open

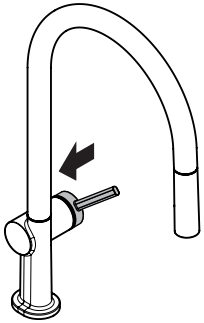

关 / close

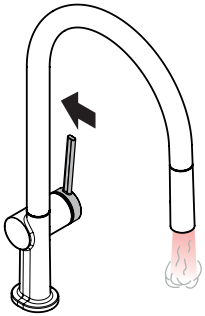

热 / hot

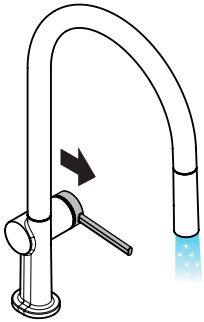

冷 / cold

Talis M54 210 2jet sBox
72801XX7

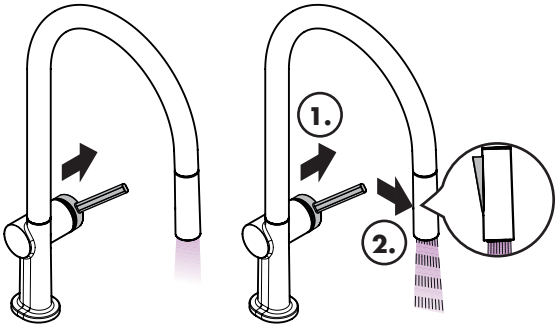

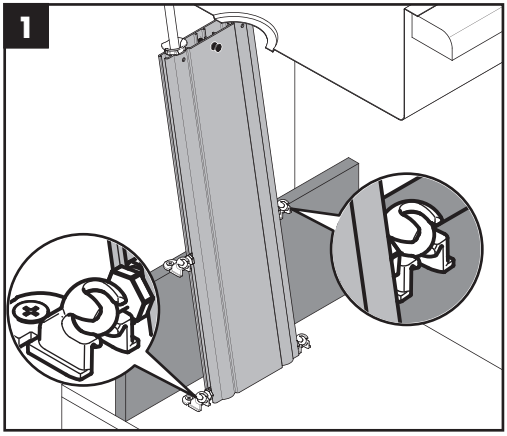

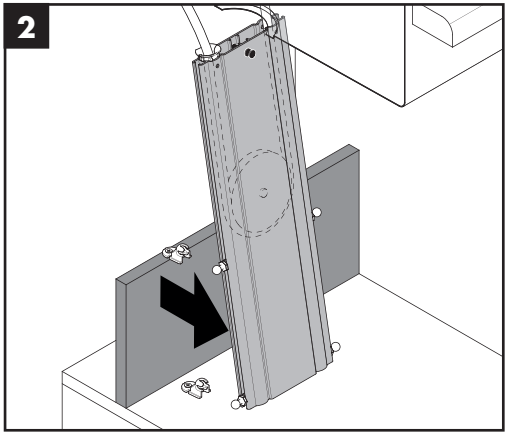

F12
43333000

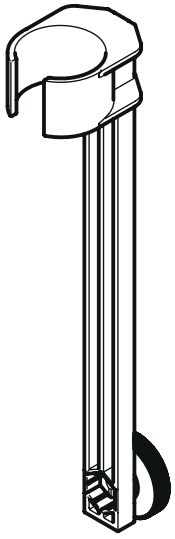

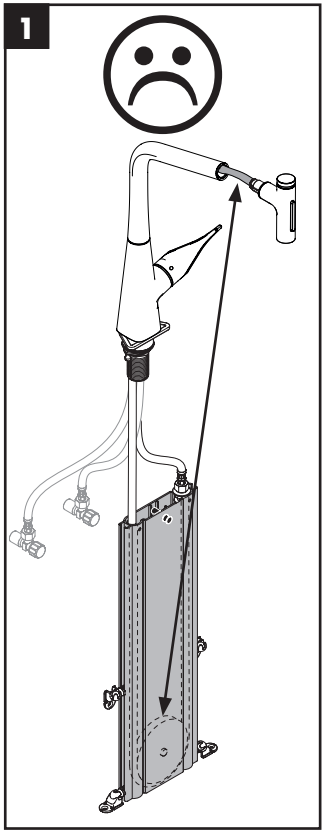

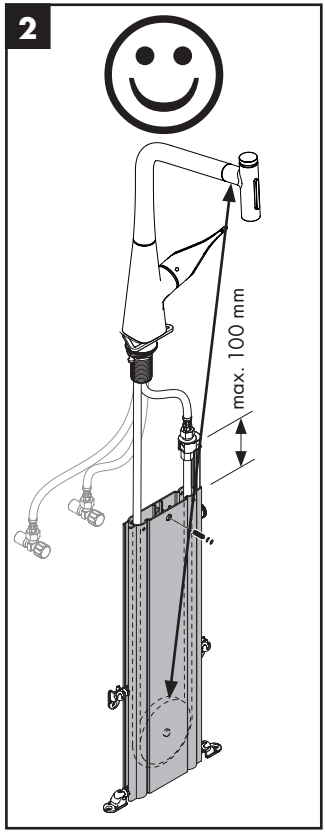

Talis M54 210 2jet sBox
72801XX7

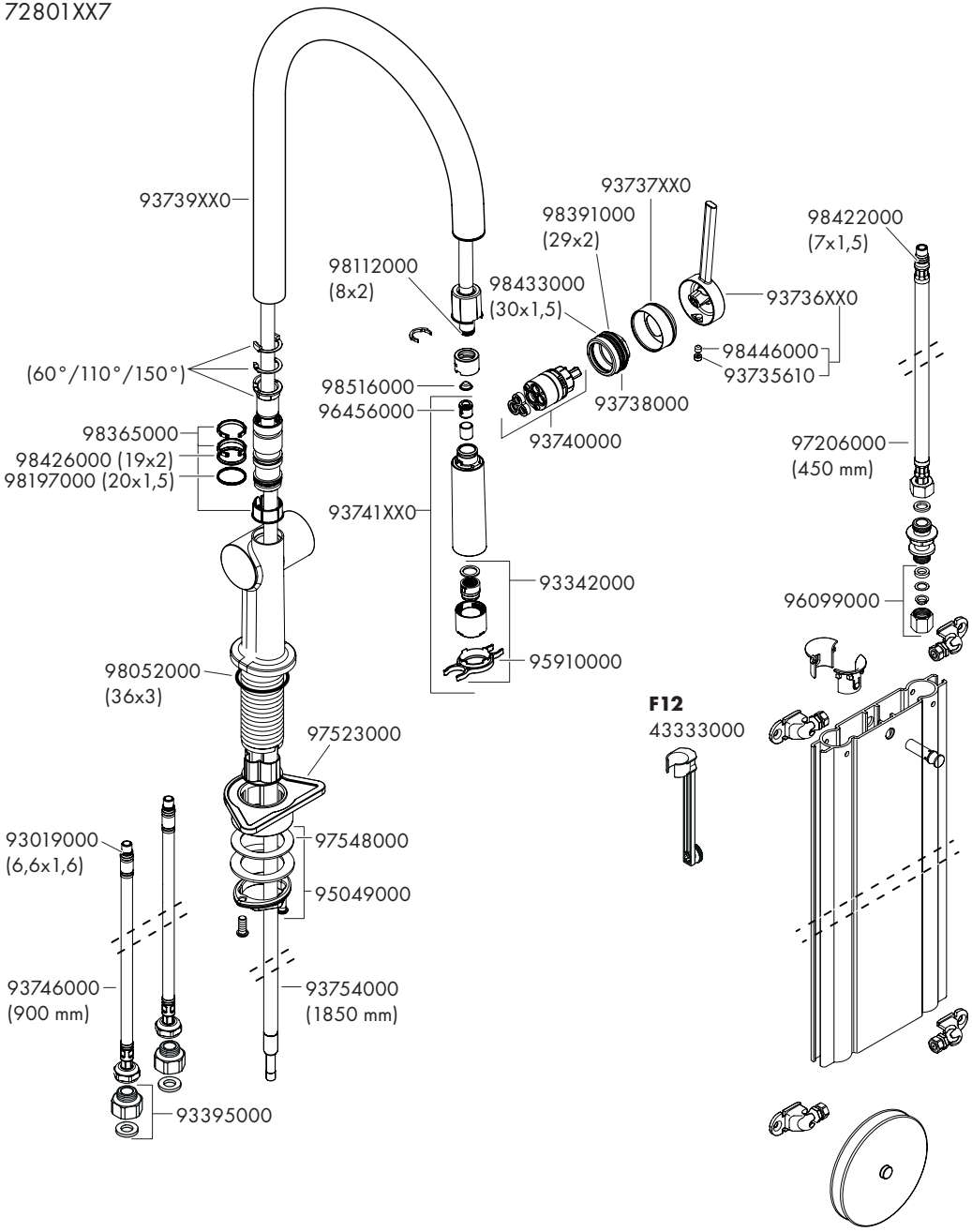

Talis M54 210 1jet sBox
72803XX7

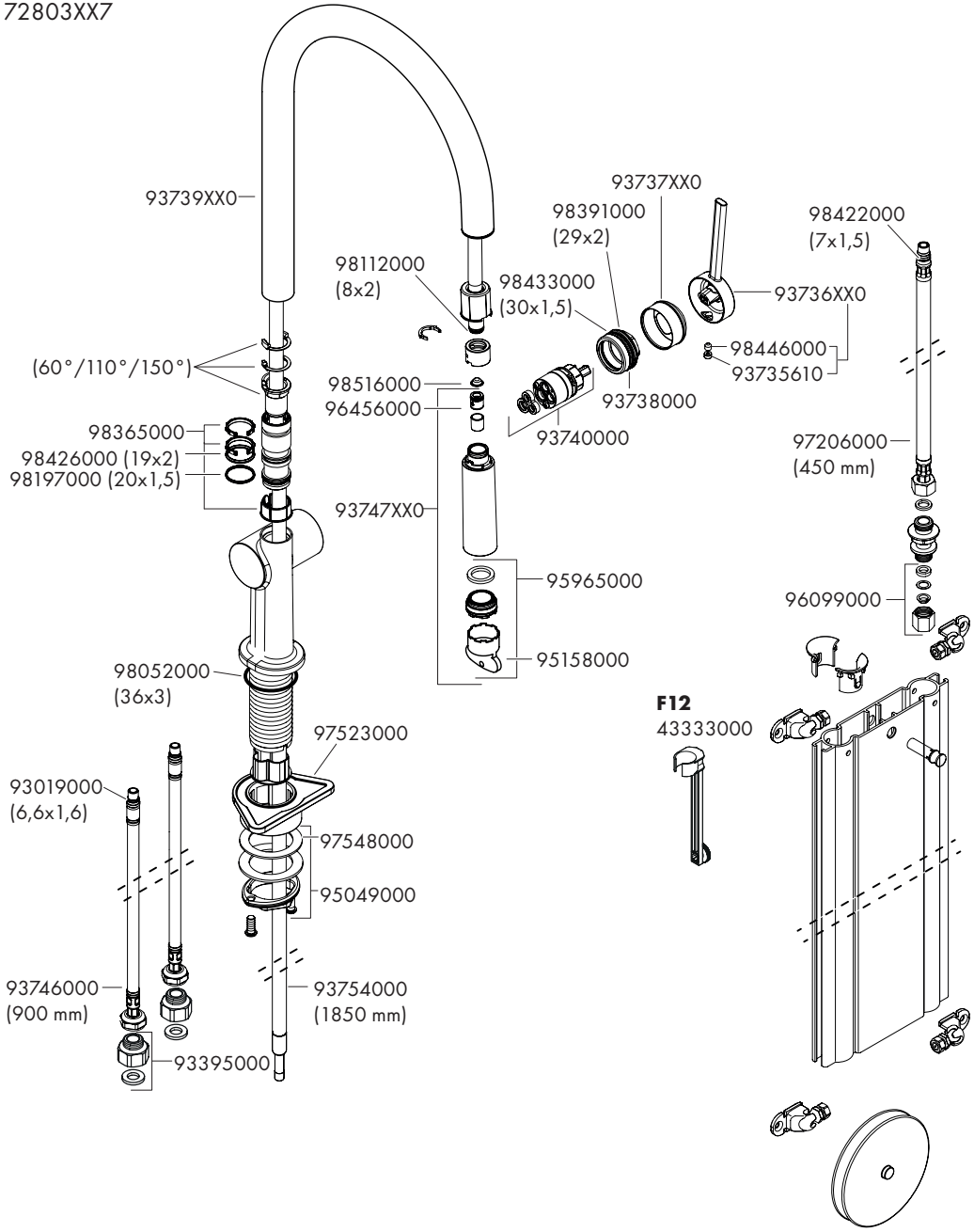

Talis M54 270 1jet sBox
72809XX7

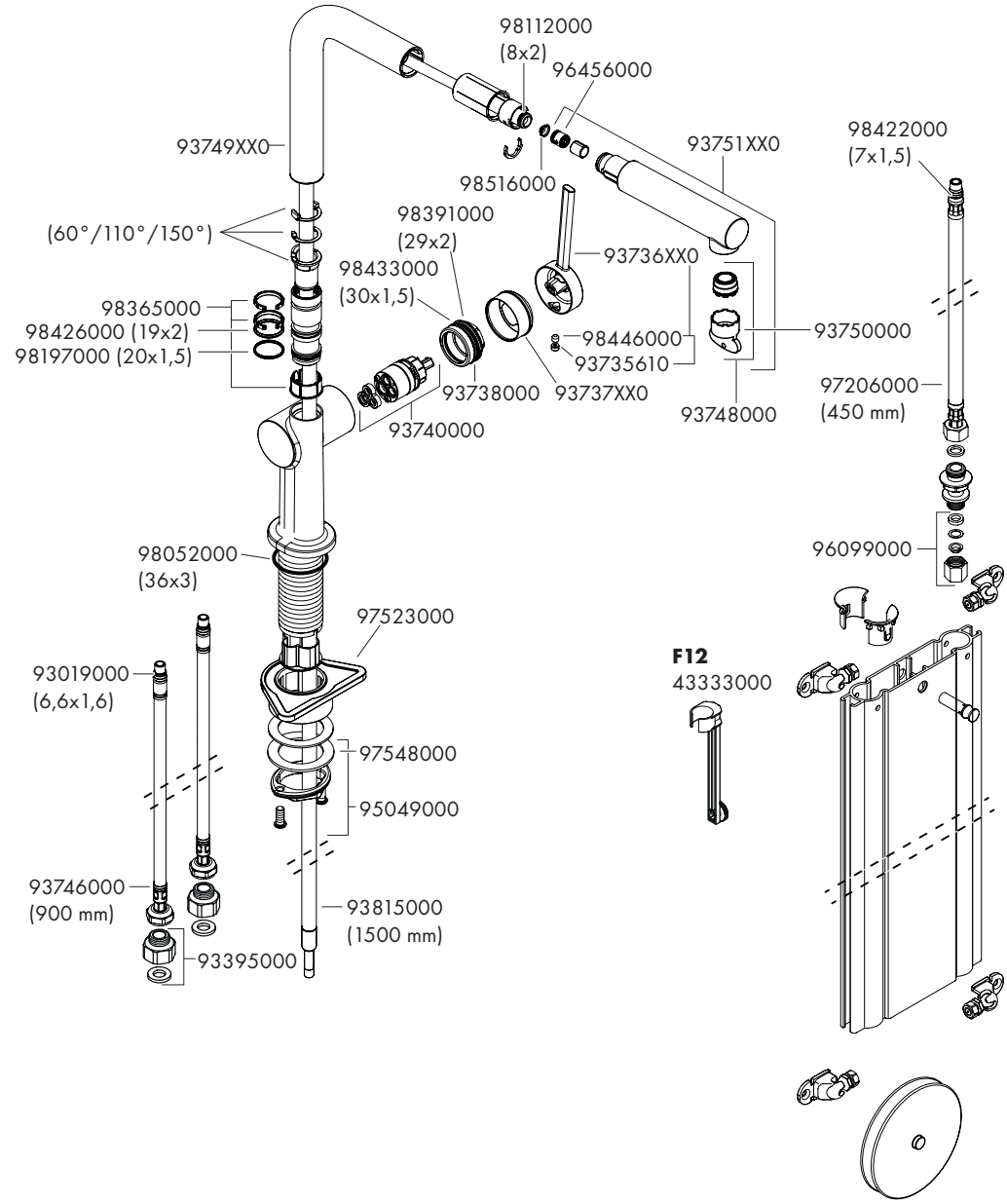

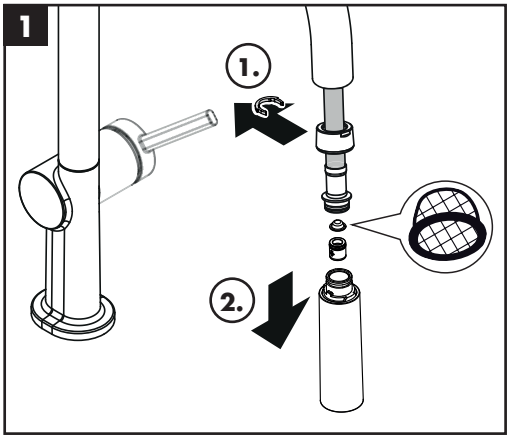
1
1.
2.

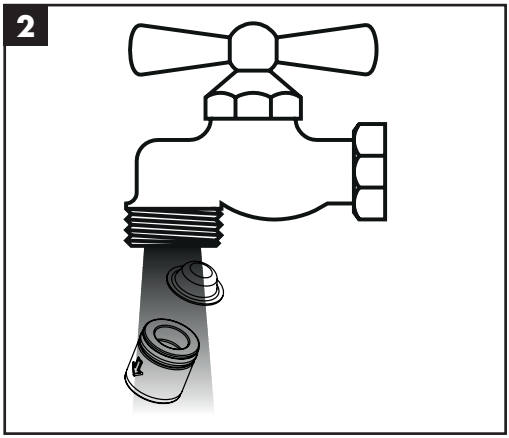
2

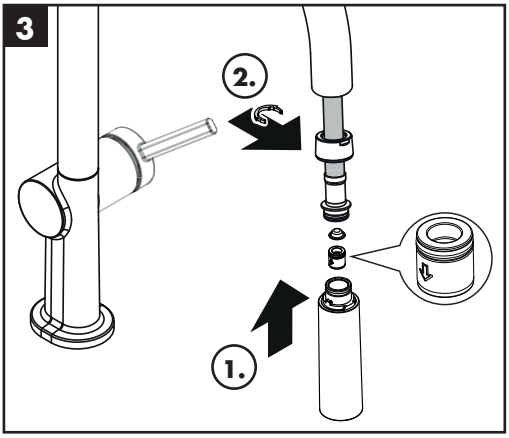
3
2.
1.

hansgrohe
Hansgrohe · Auestraße 5 - 9 · D-77761 Schiltach · Telefon +49 (0) 78 36/51-1282 · Telefax +49 (0) 7836/511440
E-Mail: info@hansgrohe.com · Internet: www.hansgrohe.com

02/2020
9.07080.51