AXOR

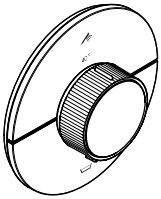

AXOR ShowerSelect ID round
36751XX7

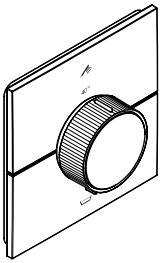

AXOR ShowerSelect ID square
36753XX7

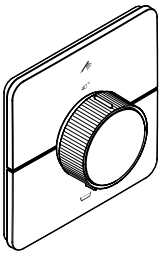

AXOR ShowerSelect ID softsquare
36755XX7

ZH / 用户手册 / 组装说明 02
EN / Instructions for use / Assembly instructions 04

INSTALLATION

⚠ 安全技巧

⚠ 装配时为避免挤压和切割受伤, 必须戴上手套.

⚠ 本产品只允许作为洗浴, 卫生和洁身之用.

⚠ 不得让儿童和肢体, 精神和/或意识有障碍的成人在不受监管的情况下使用淋浴系统. 受酒精或毒品影响的人员不得使用淋浴系统.

⚠ 冷热水管间过大的压力差必须予以平衡.

安装提示

/ 安装前必须检查产品是否受到运输损害. 安装后将不认可运输损害或表面损伤.

/ 管道和阀门必须根据通用标准进行安装, 冲洗和检查.

/ 请遵守当地国家现行的安装规定.

/ 如果将恒温器或冷热水混合器调最大温度, 闭锁阀液压开口处可能造成烫伤. Hansgrohe 建议您设置到"安全模式".

技术参数

工作压强:	最大 1 MPa
推荐工作压强:	0,1 - 0,5 MPa
测试压强:	1,6 MPa
	(1 MPa = 10 bar = 147 PSI)
热水温度:	最大 60°C
热力消毒:	70°C/4 分钟

/ 自动防止回流

/ 该产品专为饮用水设计!

符号说明



请勿使用含有乙酸的硅胶!

max. ≈42°C **安全功能** (参见第页 10)

恒温阀芯的安全功能可以预先设定所希望的最高出水温度, 例如最高温度为42°C



调节 (参见第页 09)

安装完成后必须检查调温器的出水温度. 如在取水处测量所得的温度与调温器上设定的温度有偏差, 那么必须进行调整.



保养 (参见第页 14)

/ 单向阀必须在符合国家或当地的法律的情况下按照EN 806-5定期检查 (至少一年一次).

/ 为了保证恒温器的稳定运转, 请务必定期从最热到最冷转动调温器.



大小 (参见第页 18)



流量示意图 (参见第页 18)

时的流速
①出水口 1
②出水口 2



备用零件 (参见第页 20)



选装附件 (参见第页 21)

不在供货范围内

/ 装配工具 #87567000

/ 加长件5mm (墙壁不够深时) #13641XX0, #13640XX0, #13642XX0

/ 加长件22mm (墙壁不够深时) #13645XX0, #13643XX0, #13646XX0

/ 加长 25 mm #13638000

/ 加长件 25 - 75 mm #13632000



清洗 (参见第页 22)



操作 (参见第页 19)

问题	原因	补救
/ 龙头出水量小	/ 水压不足	/ 检查总水压
	/ 调压器过滤网脏污	/ 清洁龙头前面和恒温阀芯的过滤网.
	/ 花洒滤网有垃圾堵塞	/ 清洗花洒和软管间的过滤网
	/ 止回阀芯脏污/损坏	/ 清洁并在必要时更换止回阀芯
/ 串水, 在龙头关闭的状态下, 热水被强迫流入冷水管路, 或者相反.	/ 单向阀有垃圾堵塞或漏水	/ 清洗单向阀, 如有必要则更换新的
/ 龙头出水温度和温度设定的不符	/ 恒温阀芯未被调节	/ 调节恒温器
	/ 热水温度过低	/ 将热水温度从42°C升高到60°C
/ 水温无法调节	/ 恒温阀芯表面结垢	/ 更换恒温阀芯
	/ 对于新的安装: 基体连接不正确 (可能是: 右冷, 左热) 或者安装时旋转180°	/ 安装功能块时, 旋转180°
/ 安全停止按钮不工作	/ 弹簧损坏	/ 清洁弹簧和/或按钮, 并视需要更换
	/ 按钮僵化	
/ 阀门不灵活	/ Select 停止阀 DN9 件损坏	/ 更换 Select 停止阀 DN9
/ 花洒或龙头出水嘴滴水	/ Select 停止阀 DN9 件损坏	/ 更换 Select 停止阀 DN9
/ 阀门无法打开/无法关闭	/ 伸缩 Select 过度推合	/ 再次将伸缩 Select 拉开, 重新调整
	/ 带柱塞的杠杆断裂	/ 用柱塞取代杠杆
/ 按钮松动/位置倾斜	/ 按钮没有正确啮合	/ 卡入按钮
/ 装饰罩倾斜	/ 支持板倾斜	/ 对准承载板
/ 无法实现 Eco 功能	/ 流量手柄安装不正确	/ 再次安装流量手柄

安装 (参见第页 06)

⚠ SAFETY NOTES

⚠ Gloves should be worn during installation to prevent crushing and cutting injuries.

⚠ The product may only be used for bathing, hygienic and body cleaning purposes.

⚠ Children as well as adults with physical, mental and/or sensoric impairments must not use this product without proper supervision. Persons under the influence of alcohol or drugs are prohibited from using this product.

⚠ The hot and cold supplies must be of equal pressures.

INSTALLATION INSTRUCTIONS

/ Prior to installation, inspect the product for transport damages. After it has been installed, no transport or surface damage will be honoured.

/ The pipes and the fixture must be installed, flushed and tested as per the applicable standards.

/ The plumbing codes applicable in the respective countries must be observed.

/ If the thermostat or mixer is set to maximum water temperature, there is a risk of scalding at hydraulical opening of the check valve. For this reason, Hansgrohe recommends that you set up the "Safety Function".

TECHNICAL DATA

Operating pressure:	max. 1 MPa
Recommended operating pressure:	0,1 - 0,5 MPa
Test pressure:	1,6 MPa
	(1 MPa = 10 bar = 147 PSI)
Hot water temperature:	max. 60°C
Thermal disinfection:	70°C/4 min

/ Safety against backflow

/ The product is exclusively designed for drinking water!

SYMBOL DESCRIPTION



Do not use silicone containing acetic acid!

max. ≈42°C

SAFETY FUNCTION (see page 10)

The desired maximum temperature for example max. 42°C can be pre-set thanks to the safety function.



ADJUSTMENT (see page 09)

After the installation, the output temperature of the thermostat must be checked. A correction is necessary if the temperature measured at the output differs from the temperature set on the thermostat.



MAINTENANCE (see page 14)

/ The check valves must be checked regularly according to EN 806-5 in accordance with national or regional regulations (at least once a year).

/ To guarantee the smooth running of the thermostat, it is necessary from time to time to turn the thermostat from total hot to total cold.



DIMENSIONS (see page 18)



FLOW DIAGRAM (see page 18)

free flow
① Outlet 1
② Outlet 2



SPARE PARTS (see page 20)

SPECIAL ACCESSORIES (see page 21)

order as an extra

/ Installation tool #87567000

/ Extension Set 5 mm (when wall is not deep enough) #13641XX0, #13640XX0, #13642XX0

/ Extension Set 22 mm (when wall is not deep enough) #13645XX0, #13643XX0, #13646XX0

/ extension 25 mm #13638000

/ extension 25 - 75 mm #13632000



CLEANING (see page 22)



OPERATION (see page 19)

FAULT	CAUSE	REMEDY
/ Insufficient water	/ Supply pressure inadequate	/ Check water pressure (If a pump has been installed check to see if the pump is working).
	/ Regulator filter dirty	/ Clean filter in front of the mixer and on the MTC-thermo cartridge
	/ Shower filter seal dirty	/ Clean filter seal between shower and hose
	/ Backflow preventer cartridge dirty/ defective	/ Clean backflow preventer cartridge, exchange if necessary
/ Crossflow, hot water being forced into cold water pipe, or vice versa, when mixer is closed	/ Backflow preventers dirty or leaking	/ Clean backflow preventers, exchange if necessary
/ Spout temperature does not correspond with temperature set	/ Thermostat has not been adjusted	/ Adjust thermostat
	/ Hot water temperature too low	/ Increase hot water temperature to 42 °C to 60 °C
/ Temperature regulation not possible	/ thermo cartridge calcified	/ Exchange thermo cartridge
	/ For new installations: basic body incorrectly connected (should be: cold right, hot left) or installed with 180° rotation	/ Install function block turned through 180°
/ Safety stop button not operating	/ Spring defective	/ Clean spring and/or button, exchange if necessary
	/ Button calcified	
/ Valve stiff	/ Select stop valve DN9 damaged	/ Exchange Select stop valve DN9
/ Shower or spout dripping	/ Select stop valve DN9 damaged	/ Exchange Select stop valve DN9
/ Valve does not open/does not close	/ Select telescope pushed too far together	/ Pull the Select telescope apart again and readjust it
	/ Lever with plunger broken	/ Replace lever with plunger
/ Button is loose/stands at an angle	/ Button not properly engaged	/ Engage button
/ Rosette is slanted	/ Support plate is slanted	/ Align carrier plate
/ Eco-function not possible	/ Volume handle incorrectly mounted	/ Mount volume handle again

ASSEMBLY (see page 06)

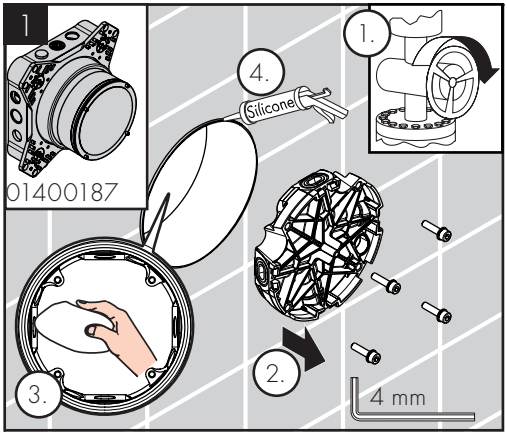
1
01400187
1.
2.
3.
4.
Silicone
4 mm

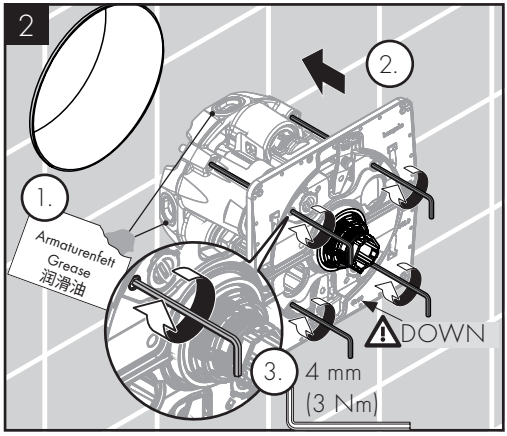
2
1.
Armaturenfett
Grease
润滑油
2.
3.
DOWN
4 mm
(3 Nm)

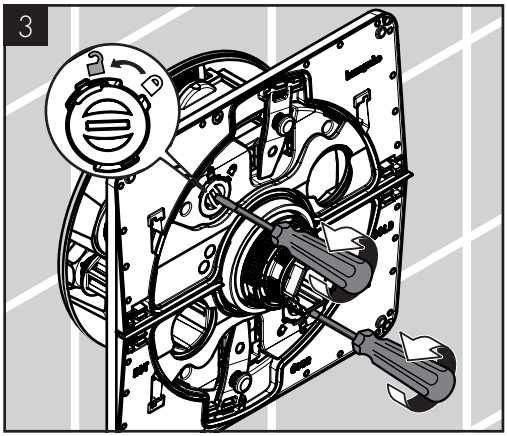
3

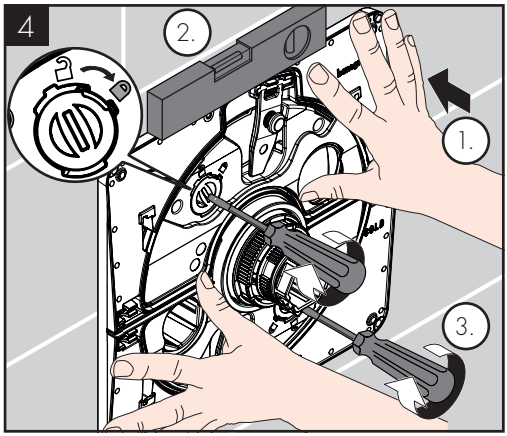
4
2.
1.
3.

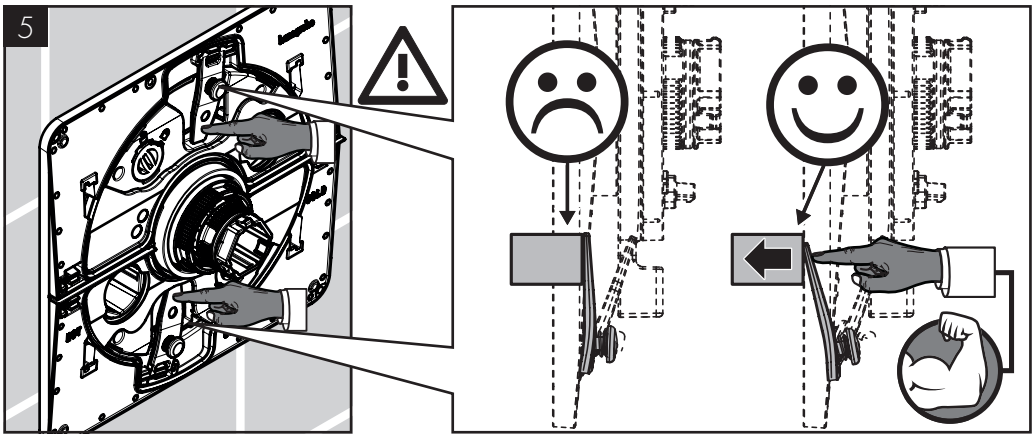
5

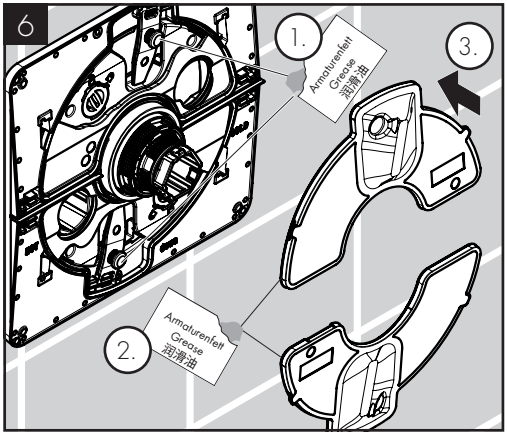
6
1.
Armaturenfett
Grease
润滑油
3.
2.
Armaturenfett
Grease
润滑油

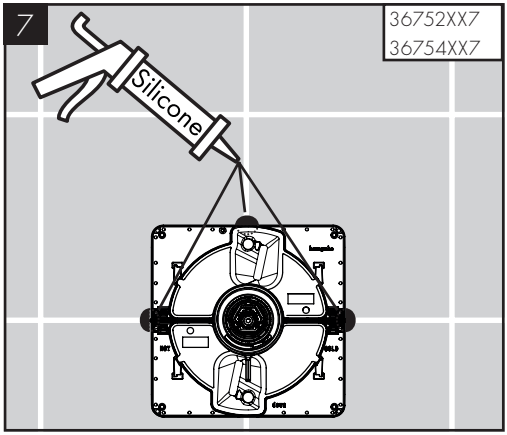
7
36752XX7
36754XX7
Silicone

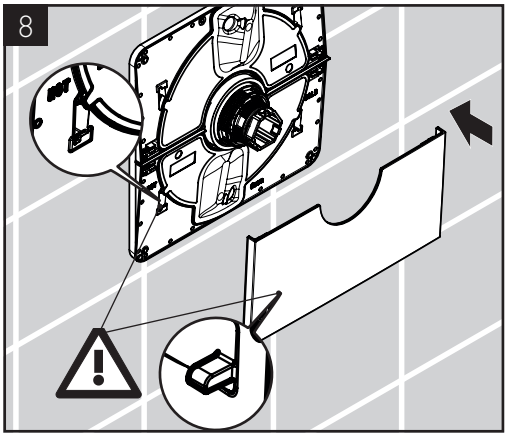
8

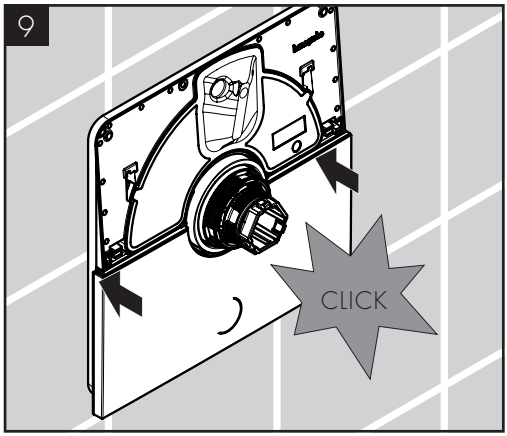
9
CLICK

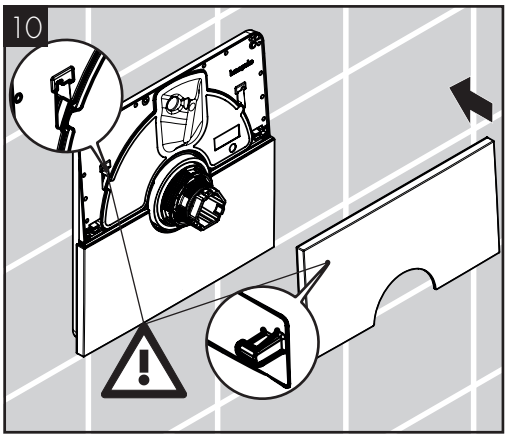
10

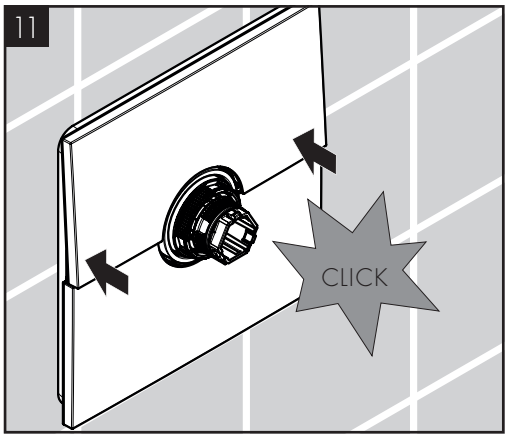
11
CLICK

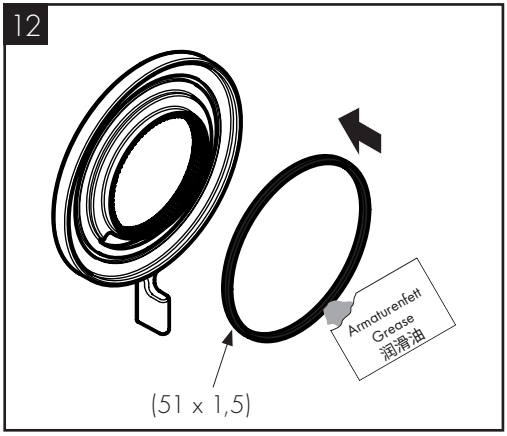
12
Armaturenfett
Grease
润滑油
(51 x 1,5)

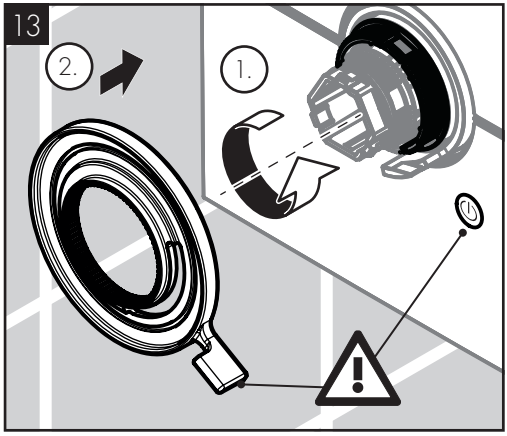
13
2.
1.

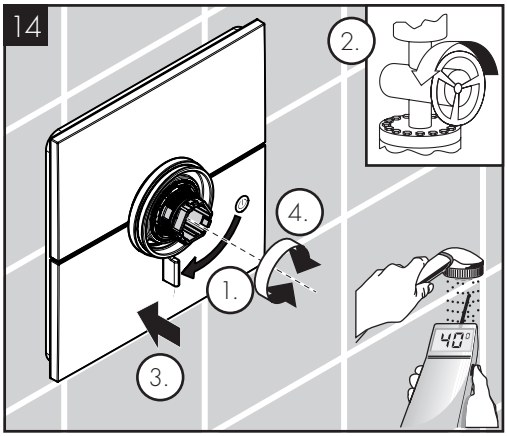
14
2.
4.
1.
3.
40°

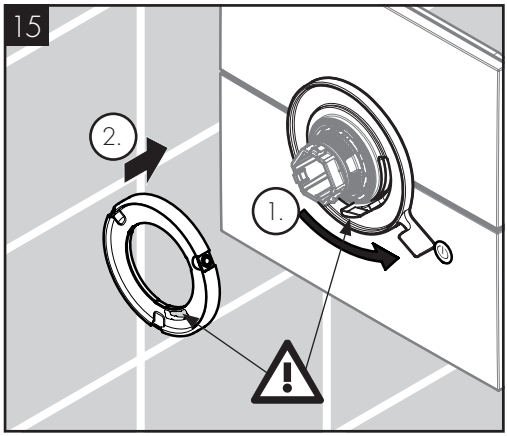
15
2.
1.

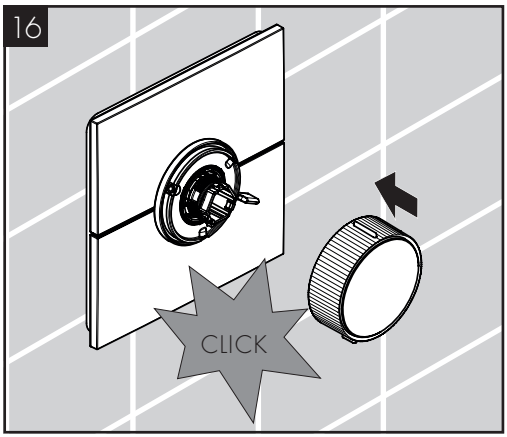
16
CLICK

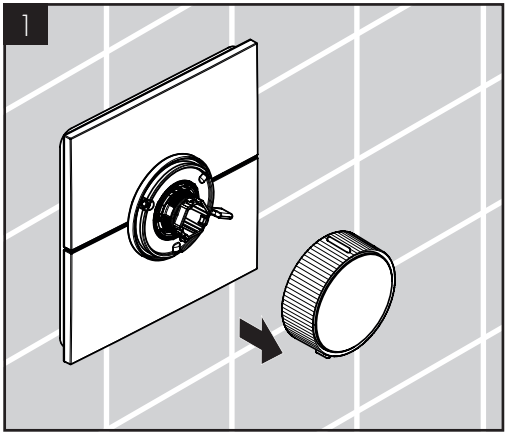
1

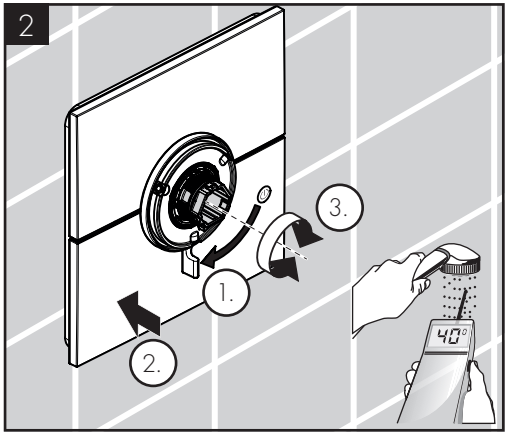
2
3.
1.
2.
40°

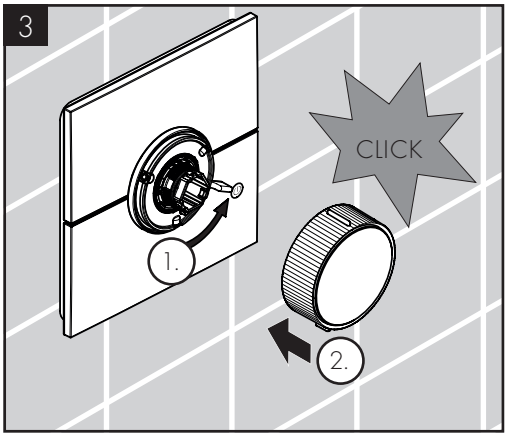
3
CLICK
1.
2.

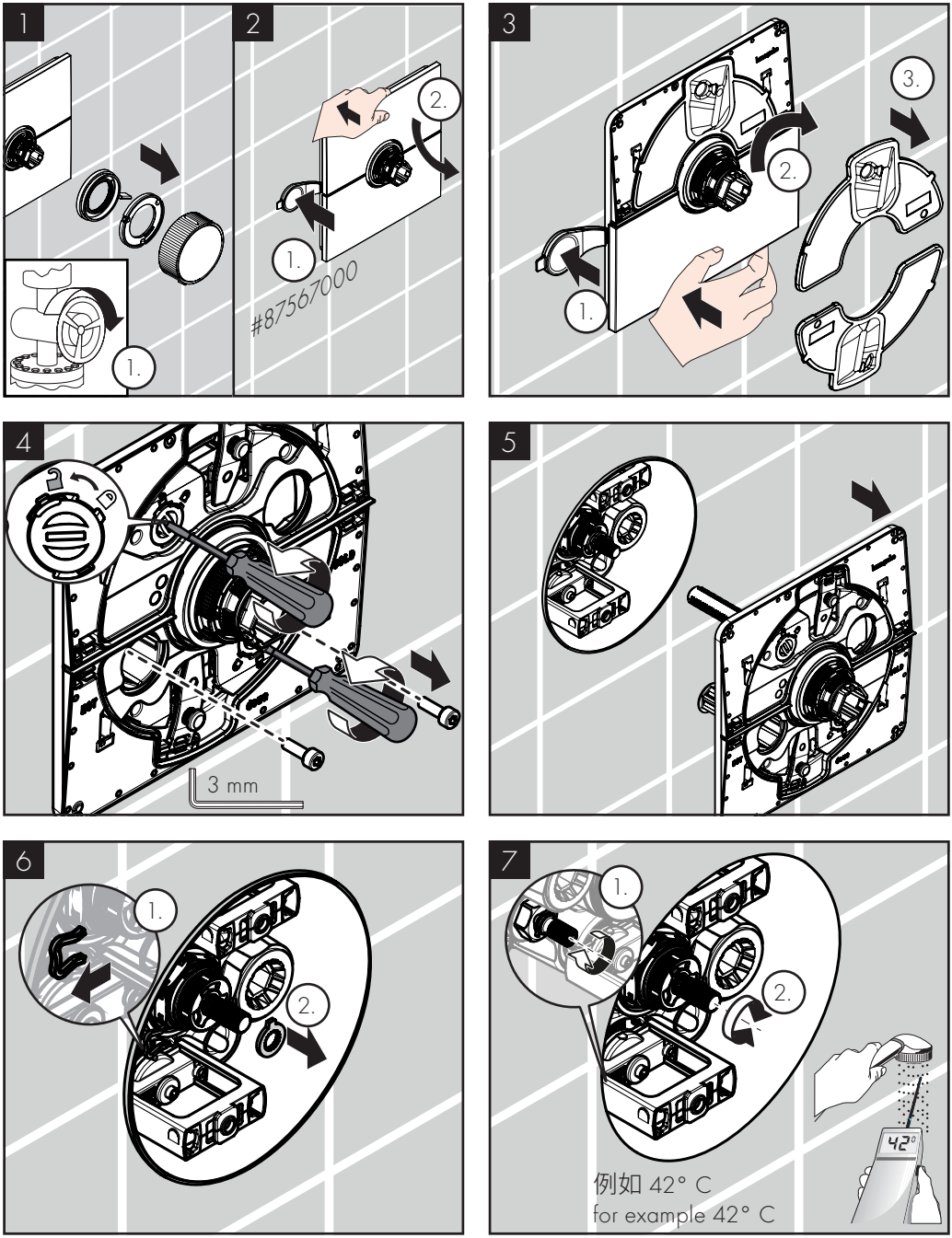
1
1.
2
2.
1.
#87567000
3
3.
2.
1.
4
3 mm
5
6
1.
2.
7
1.
2.
42°
例如 42° C
for example 42° C

max.
≈42°C

8

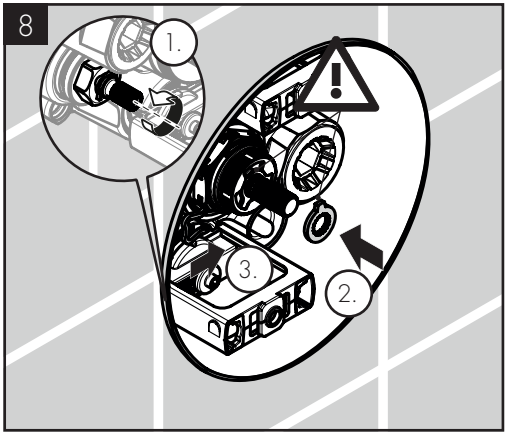

9

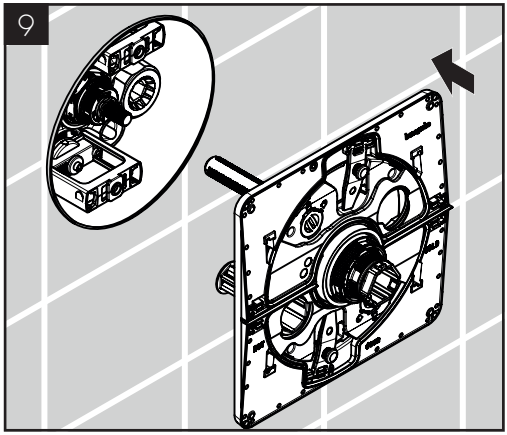

10

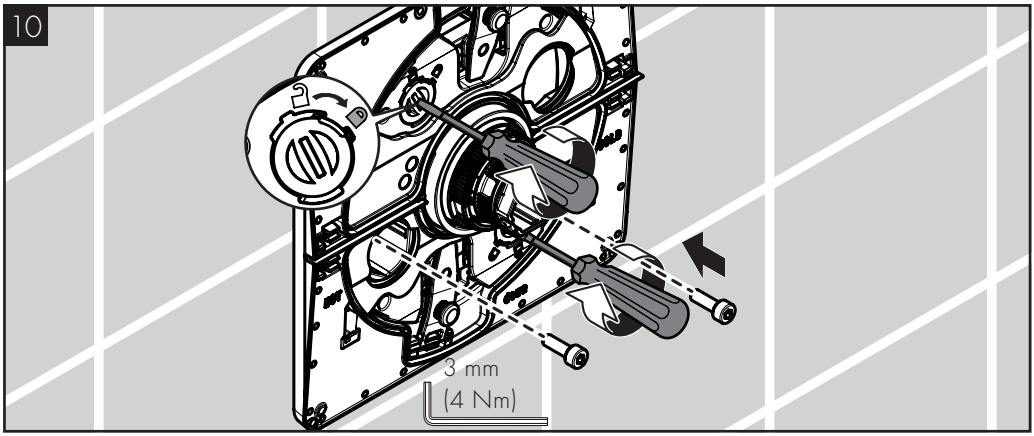

11

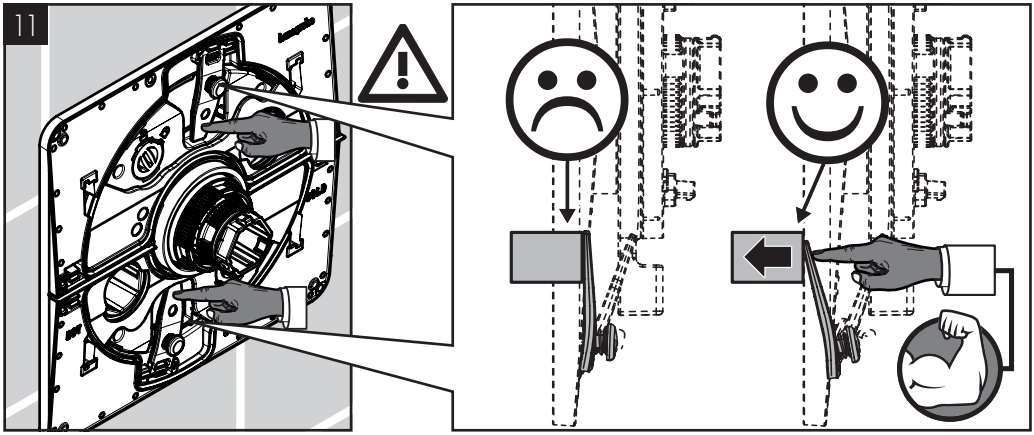

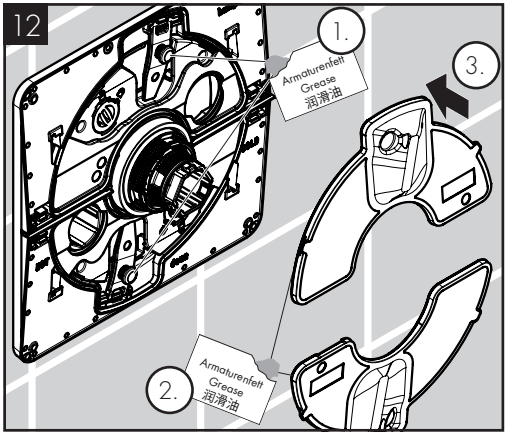
12
1.
Armaturenfett
Grease
润滑油
3.
2.
Armaturenfett
Grease
润滑油

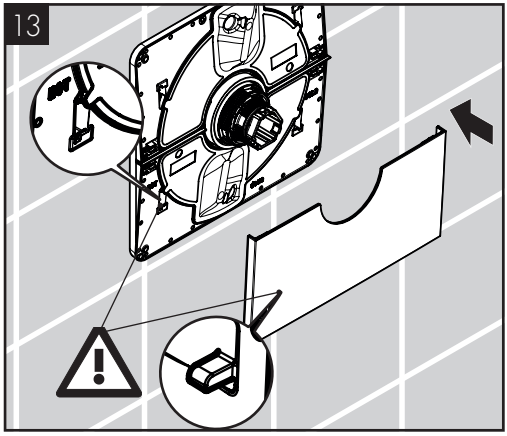
13

max.
≈42°C

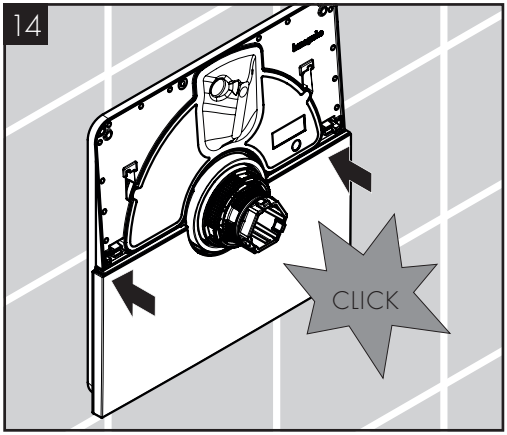

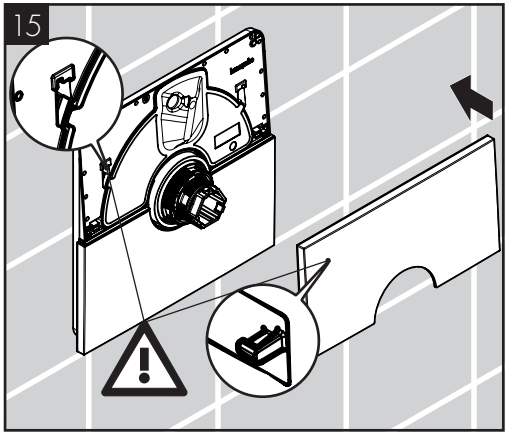

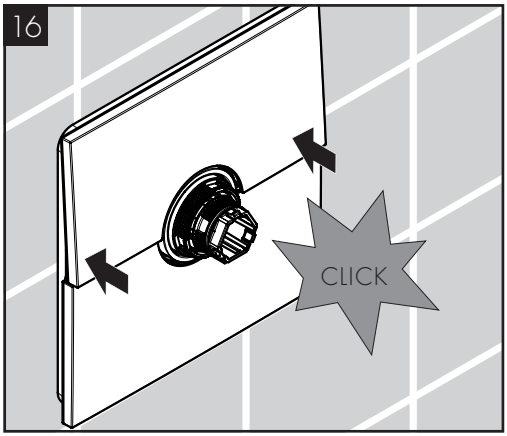

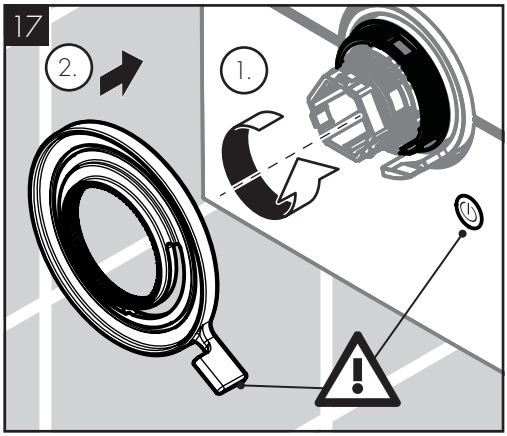

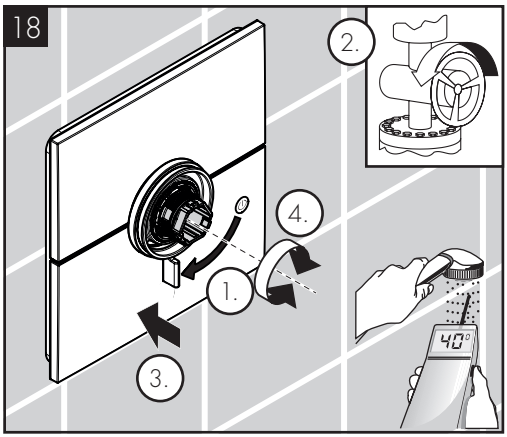

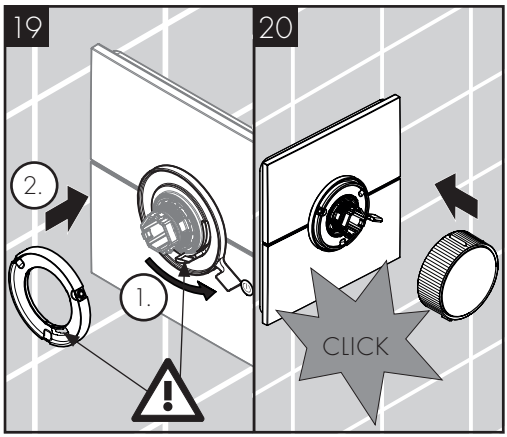

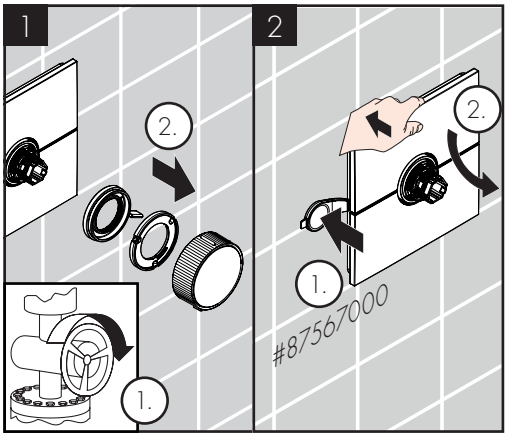
1
2.
1.
2
2.
1.
#87567000

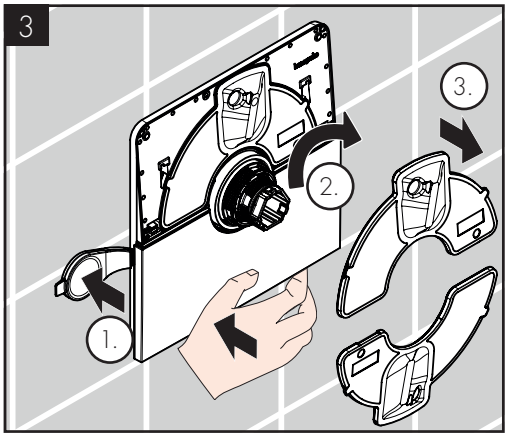
3
3.
2.
1.

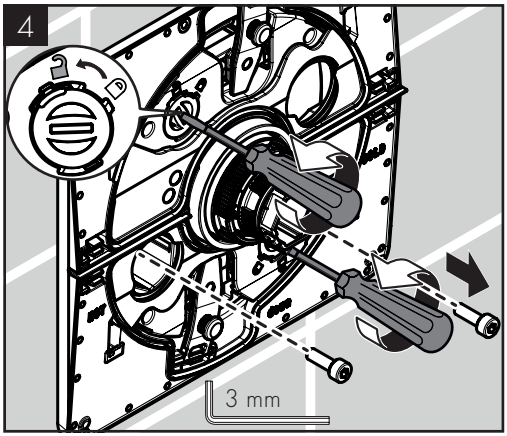
4
3 mm

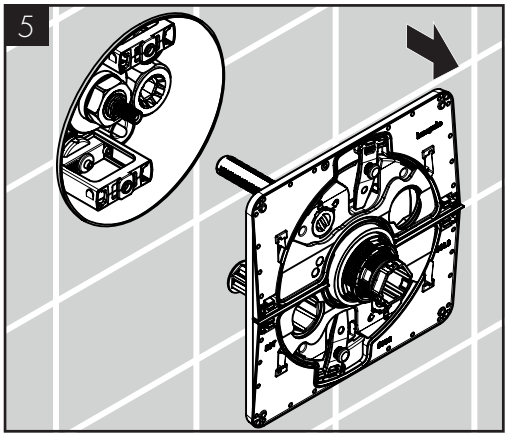
5

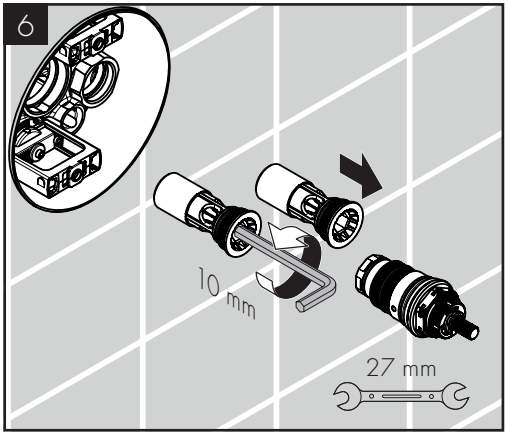
6
10 mm
27 mm

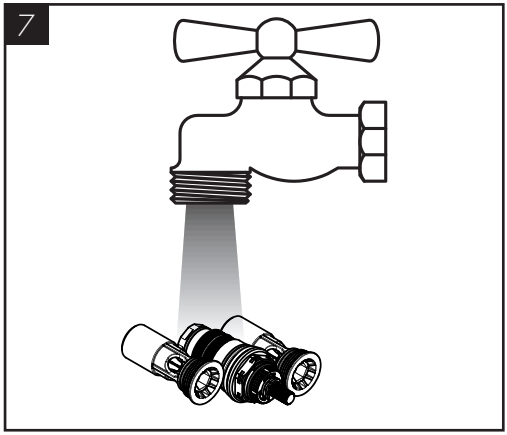
7

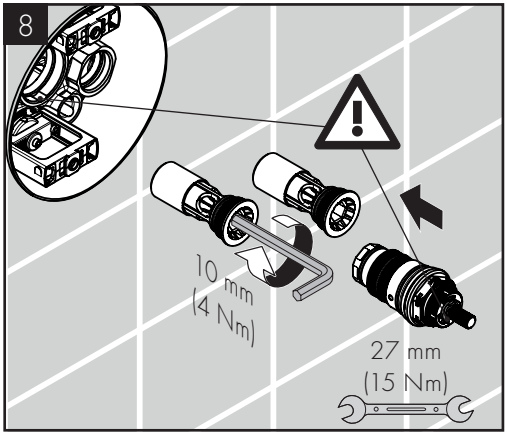
8
10 mm
(4 Nm)
27 mm
(15 Nm)

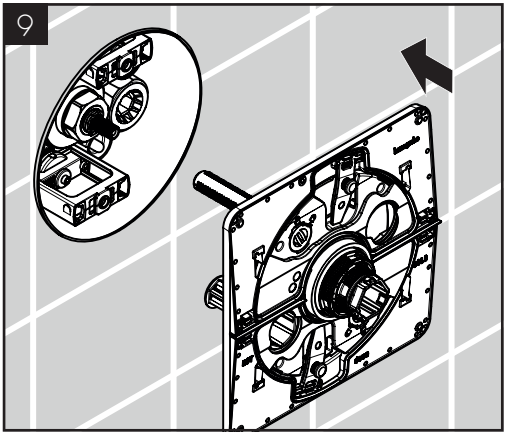
9

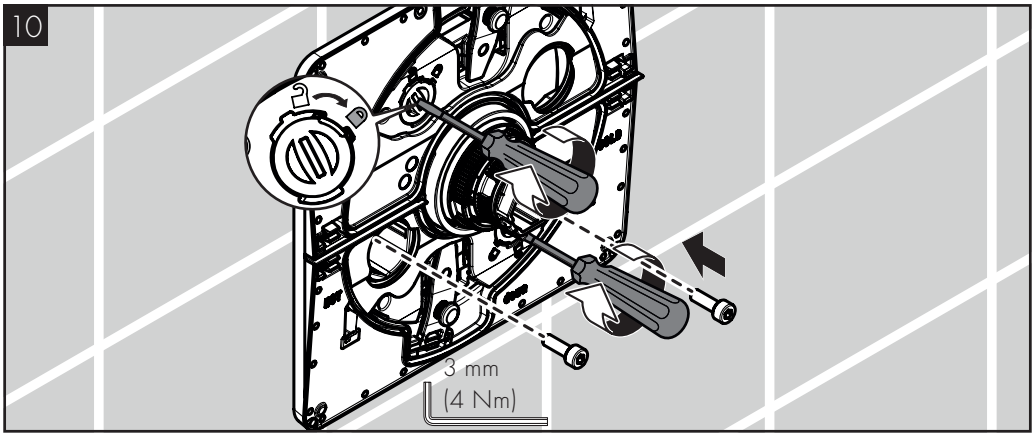
10
3 mm
(4 Nm)

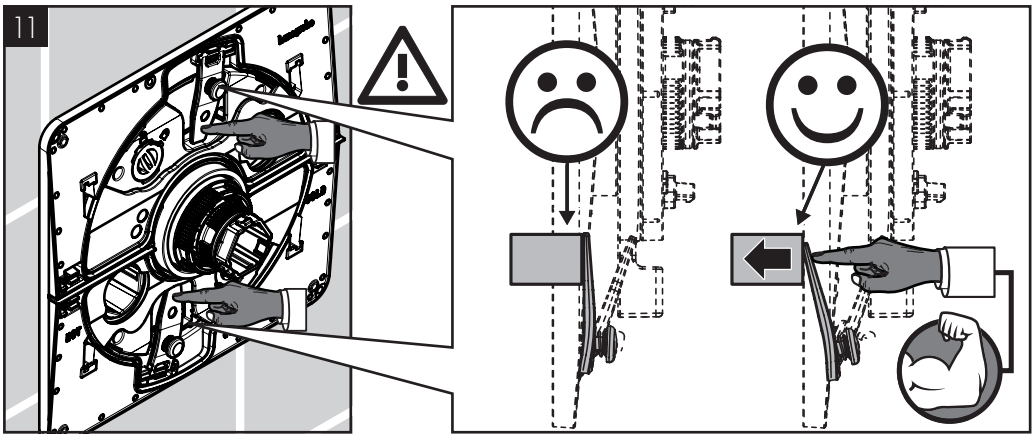
11

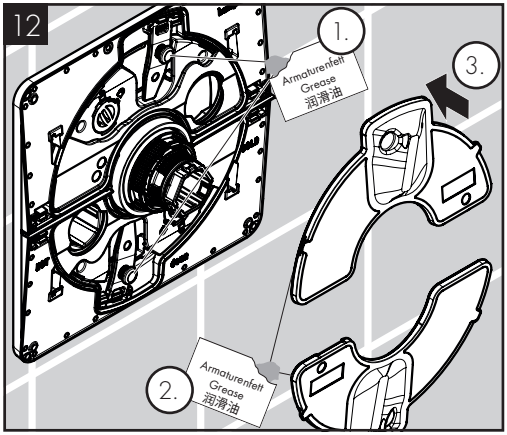
12
1.
Armaturenfett
Grease
润滑油
3.
2.
Armaturenfett
Grease
润滑油

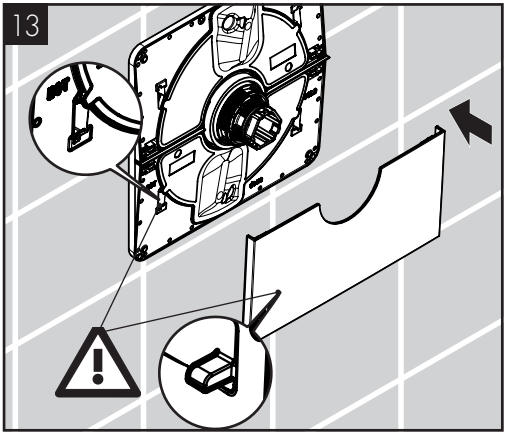
13

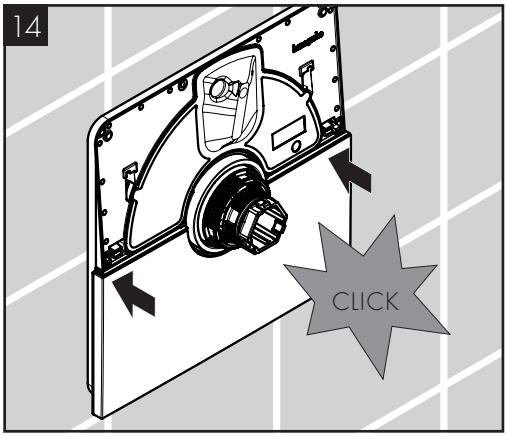
14
CLICK

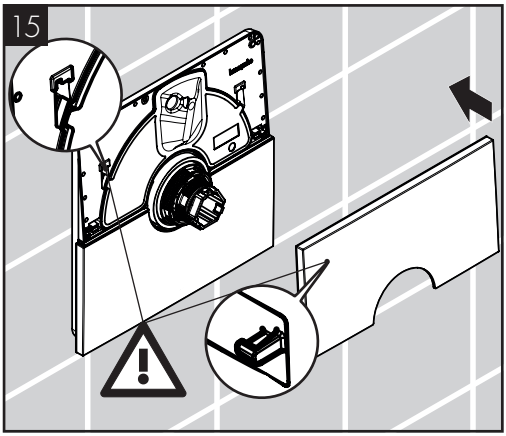
15

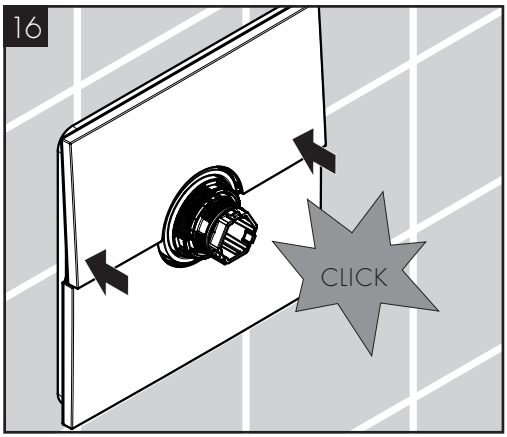
16
CLICK

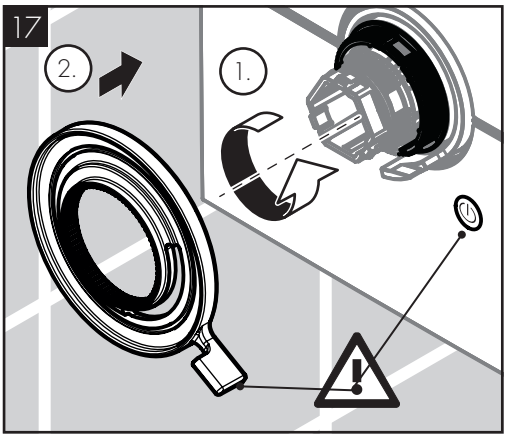
17
2.
1.

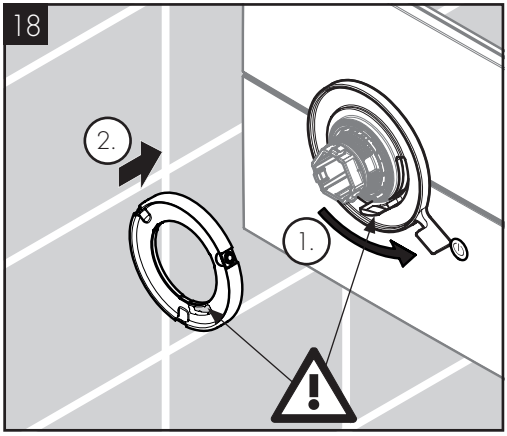
18
2.
1.

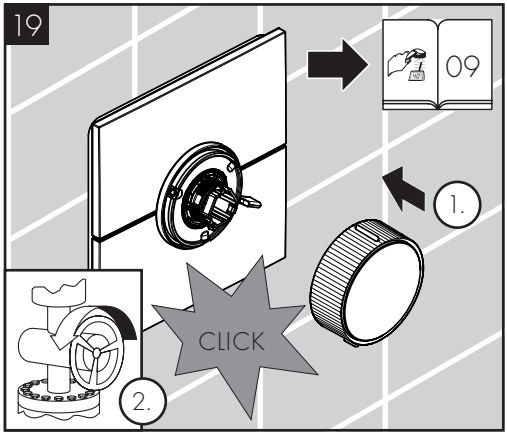
19
09
1.
CLICK
2.

AXOR ShowerSelect ID round
36751XX7

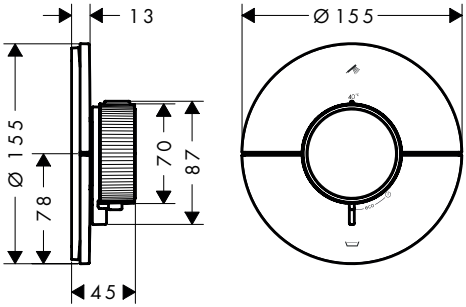

AXOR ShowerSelect ID square
36753XX7

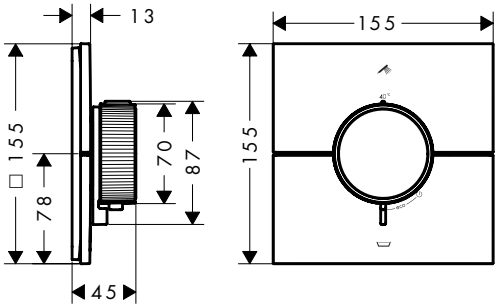

AXOR ShowerSelect ID softsquare
36755XX7

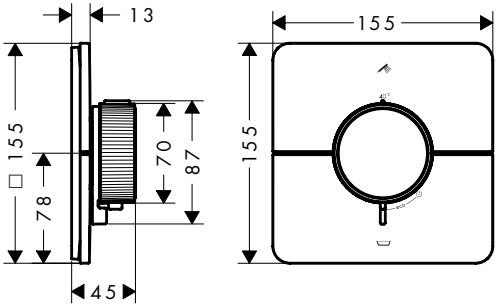

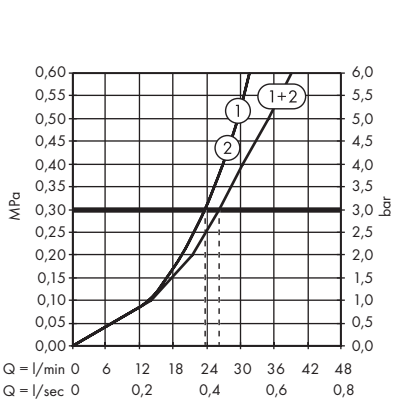

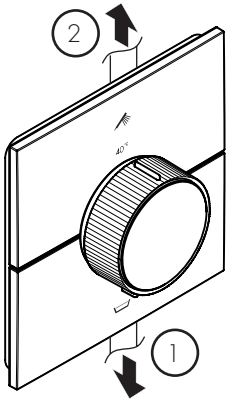

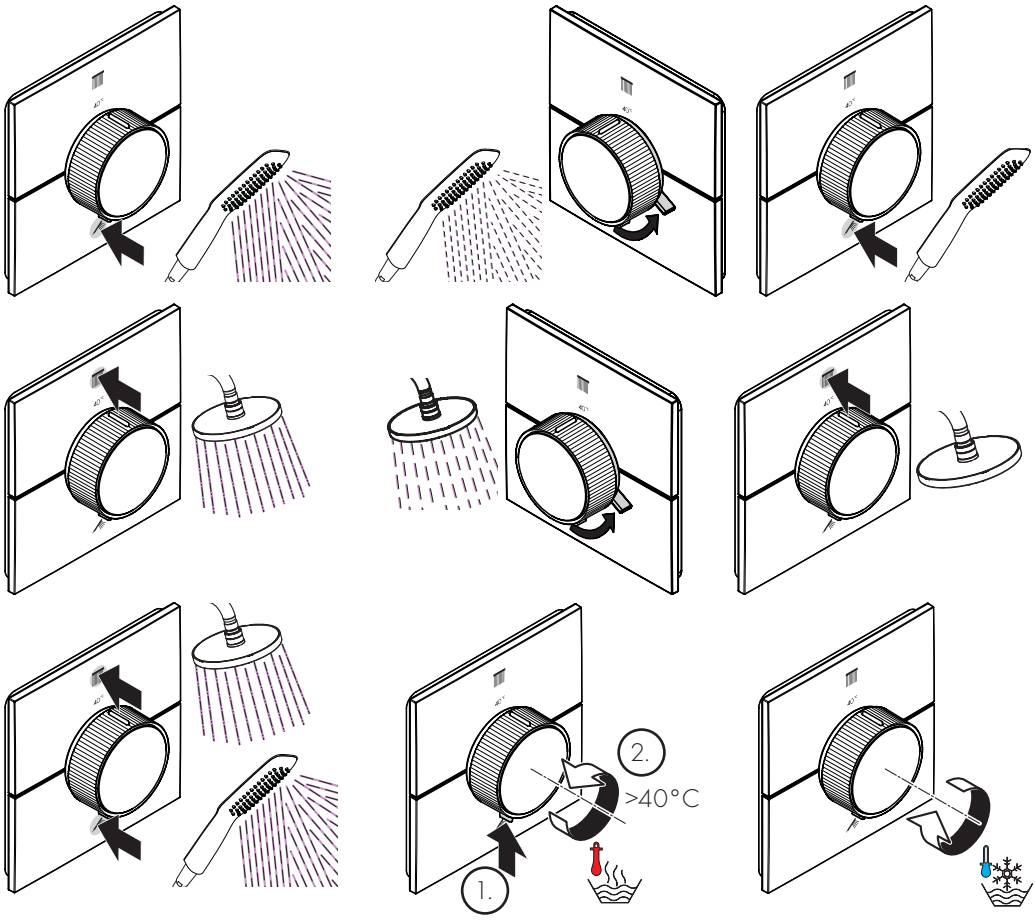
2.
>40°C
1.

AXOR ShowerSelect ID square
36753XX7

AXOR ShowerSelect ID softsquare
36755XX7

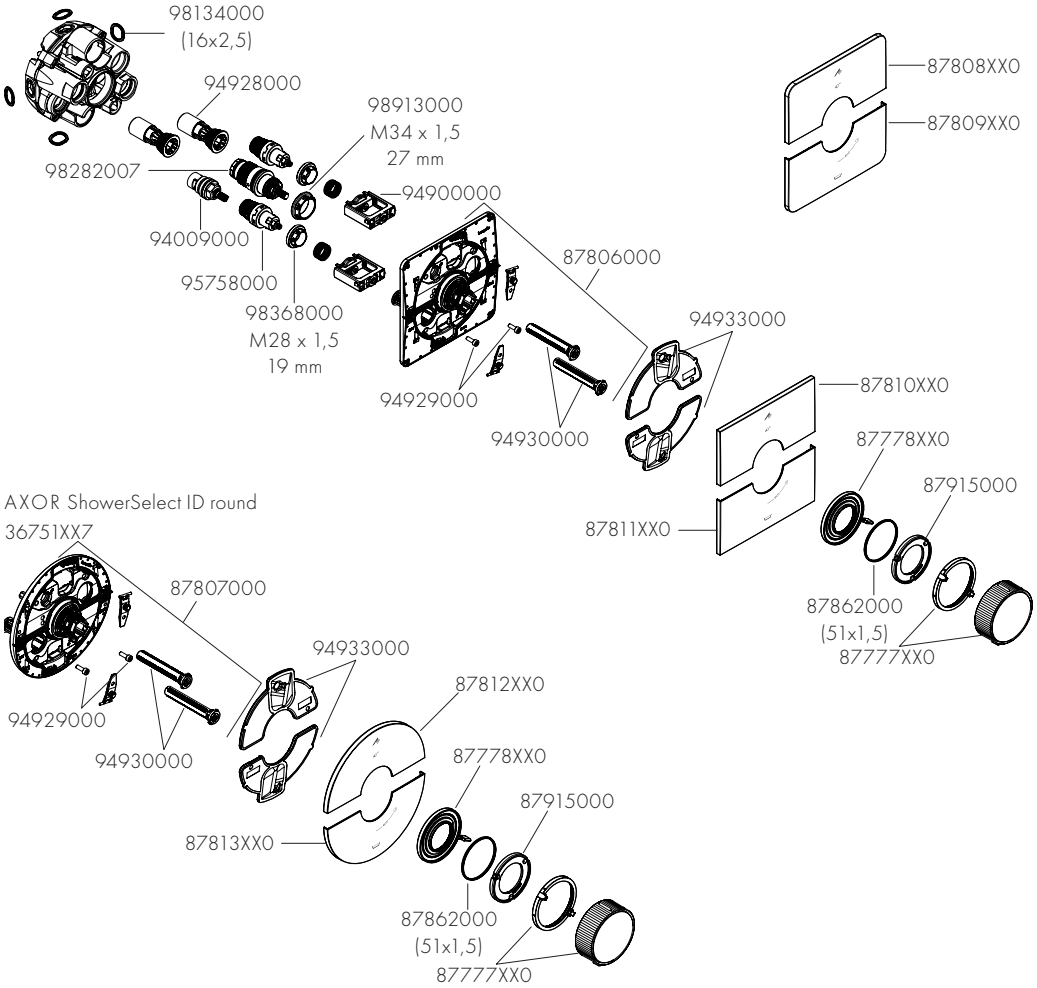

AXOR ShowerSelect ID round
36751XX7

XX = 颜色代码/Colors

00 = Chrome Plated
14 = Brushed Bronze
25 = Brushed Gold-Optic
30 = Polished Redgold
31 = Brushed Redgold
33 = Polished Black Chrome
34 = Brushed Black
67 = Matt Black
80 = Stainless Steel Optic
82 = Brushed Nickel
95 = Brushed Brass
99 = Polished Gold-Optic

5 mm
13641XX0

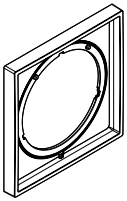

5 mm
13640XX0

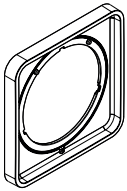

5 mm
13642XX0

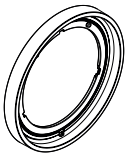

22 mm
13645XX0

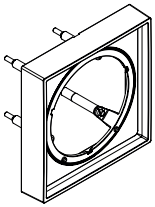

22 mm
13643XX0

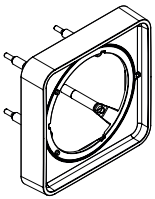

22 mm
13646XX0

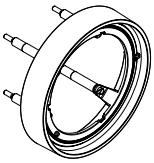

25 - 75 mm
13632000

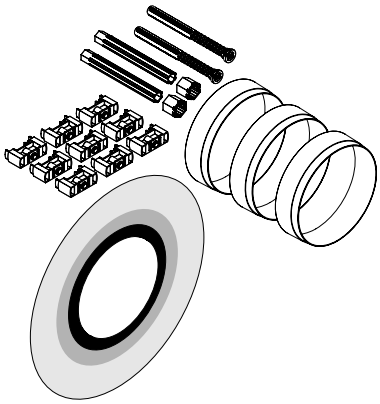

25 mm
13638000

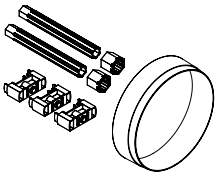

87567000

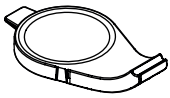

汉斯格雅产品的清洁建议

现代的卫浴龙头, 厨房龙头, 花洒, 配件, 盥洗台, 洗涤盆, 浴盆和加热器采用的制造材料非常迥异, 以适应产品外形设计和使用功能的市场需求.

为了避免产品损坏和由此引发的投诉及争议, 必须在使用和清洁产品时遵循有关规程.

在保养汉斯格雅产品时, 原则上必须注意:

- 只能使用那些有明确注明是适用于本产品的清洁剂.
- 不允许使用含有盐酸, 蚁酸, 浓氢氧化钠, 氯漂或醋酸的清洁剂, 因为这些清洁剂会给产品表面造成严重的损伤.
- 含磷酸的清洁剂必须在特定条件下使用.
- 不允许将两种以上清洁剂混合使用.
- 不允许使用具有研磨作用的清洁工具和设备, 如不适合的清洁粉末, 海绵垫或超细麦克布.
- 务必遵守清洁剂制造商的安全说明.
- 严格遵守清洁剂的用量和作用时间, 决不允许清洁剂的作用时间长于规定值.
- 定期的清洁以预防水垢.
- 不允许将清洁剂直接喷射到汉斯格雅产品上, 因为喷雾会进入汉斯格雅产品的开口部分和缝隙中而造成损害. 首先将清洁剂喷在软布上, 再用软布进行清洁.
- 清洁之后必须用足够的清水冲洗, 以彻底去除残留的吸附物 (清洁剂).
- 不允许使用蒸汽清洗机, 高温会损害产品.

重要说明

肥皂, 洗发水, 沐浴液, 染发剂, 香水, 刮胡水, 指甲油的残留也会对产品造成损伤.

此处: 使用后要小心地用清水将剩余物冲洗干净.

同样在产品下方不得存放洗涤剂和化学药品, 例如不可放在用于洗脸盆的梳洗柜中否则挥发气体将损坏产品.

在已经损伤的表面继续使用清洁剂会给表面造成更大的损伤.

表面损坏的部件必须更换, 否则会有受伤的危险.

不按规定进行清洁而造成的任何损坏不在本公司产品保修范围之内.

担保

Axor 向用户保证, 该产品无制造缺陷. 如果自购买之日起五年内出现缺陷, Axor 将免费排除. 保证条件和详情见 www.hansgrohe.com/guarantee. 在提出保修的权利时请联系您的合同方. 本保证不涉及有关国家法律规定的消费权益.

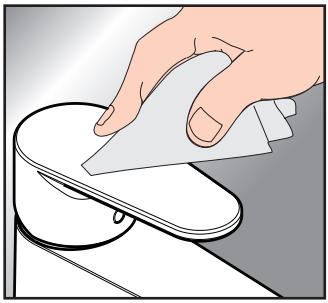

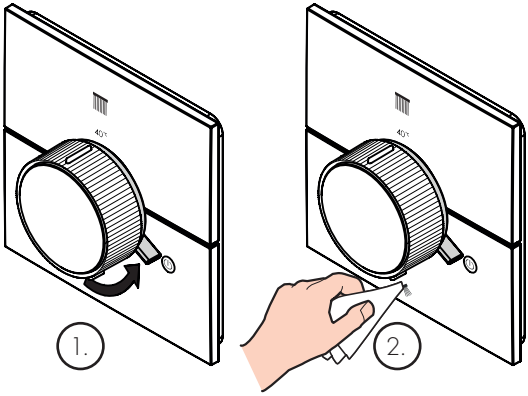

CLEANING RECOMMENDATION FOR AXOR PRODUCTS

Today, modern sanitary and kitchen tapware, showers, accessories, washstands, sinks, tubs and radiators consist of very different materials to comply with the needs of the market with regard to design and functionality.

To avoid damage and reclamations, it is necessary to consider certain criteria when cleaning.

WITH REGARD TO CARING FOR THE AXOR PRODUCTS, THE FOLLOWING MUST IN PRINCIPLE BE HEEDED:

- Only use cleaning material which is explicitly provided for this type of application.
- Never use cleaning materials, which contain hydrochloric acid, formic acid, concentrated caustic soda, chlorine pale lye or acetic acid, as they cause considerable damage.
- Phosphorus acidic cleaners are only conditionally applicable.
- Mixing cleaning agents is not permitted, generally.
- Never use cleaning materials or appliances with an abrasive effect, such as unsuitable cleaning powders, sponge pads or micro fibre cloths.
- The safety instructions of the cleaning agent manufacturers must be strictly followed.
- Cleaning has to be carried out with a specified cleaner dosage, contact time, object-related and adapted to the needs.
- The building up of calcifications has to be removed by cleaning regulary.
- When using spray cleaners, spray the cleaning solution onto a soft cloth or sponge, never directly onto the Axor products, as the atomised spray could enter openings and gaps in the Axor products and cause damage.
- After cleaning rinse thoroughly with clean water to remove any cleaner residue.
- The use of steam cleaners is not permitted. The high temperatures can damage the products.

IMPORTANT

Residues of toiletries such as liquid soaps, shampoos and shower gels, hair dyes, perfumes, aftershave and nail varnish can also cause damage.

Here too: Carefully rinse with water after use to remove residues.

Likewise, do not store any cleaning agents or chemicals under the products, for example in a vanity unit, as the vapours may damage the products.

The damage of already damaged surfaces will deteriorate under the effect of the cleansers.

COMPONENTS WITH DAMAGED SURFACES MUST BE EXCHANGED, OTHERWISE THERE COULD BE AN INJURY DANGER.

Damage caused by improper treatment will not be covered by our guarantee.

WARRANTY

Axor guarantees to the consumer that this product is free of production faults. If nevertheless any defect is detected within 5 years from date of purchase, Axor will remedy this defect free of charge. You will find the conditions and details of this guarantee at www.hansgrohe.com/guarantee. Please contact your contracting party to claim your rights under this guarantee. This guarantee does not affect the customer's rights under the respective national legislation.

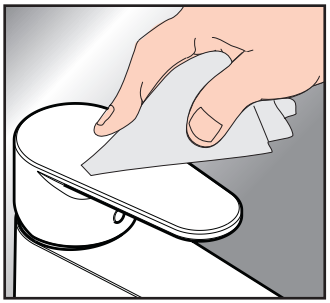

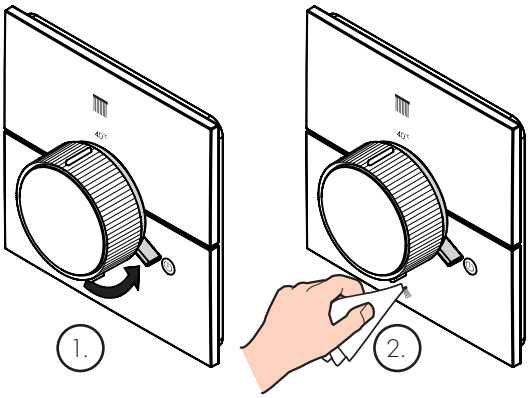

AXOR

Axor / Hansgrohe SE
Auestraße 5-9
77761 Schiltach
Deutschland

info@axor-design.com
axor-design.com

07/2024
9.19554.51